HIGH PRODUCTIVITY GANG TYPE 6-INCH
GLOBAL COMPACT TURNING CENTER

Lynx

2100G

DN SOLUTIONS

Lynx 2100G

The 6” chuck Lynx 2100G is a compact gang-type turning centre that, with its onboard thermal compensation, delivers high productivity and accuracy during long and extended machining runs. The machine can be easily automated thereby improving its performance still further.

OUTSTANDING PERFORMANCE

- Powerful cutting capacity with a maximum 18.5kW spindle power
- Improved spindle frame and the low-vibration structure of the machine's feed axes and bed surface deliver higher productivity over long periods of operation.

SPATIALLY EFFICIENT DESIGN AND CONFIGURATION

- Compact footprint with over a 20% larger machining envelope compared to previous model
- Use of right side and rear side chip conveyor enables chip disposal direction to change without changing coolant tank

ENHANCED OPERATION AND EFFICIENCY

- Eco-friendly grease lubrication for easy maintenance and cost savings.
- Easy to integrate and install automation systems with minimal disruption

BASIC STRUCTURE

60° slant integral type bed with Roller type LM guideways on all axes ensures low vibration and high efficiency chip disposal.

Rapid traverse

X-axis **30** m/min
1181.1 ipm

Z-axis **36** m/min
1181.1 ipm

Travel distance

X-axis **450** mm
17.7 inch

Z-axis **340** mm
13.4 inch

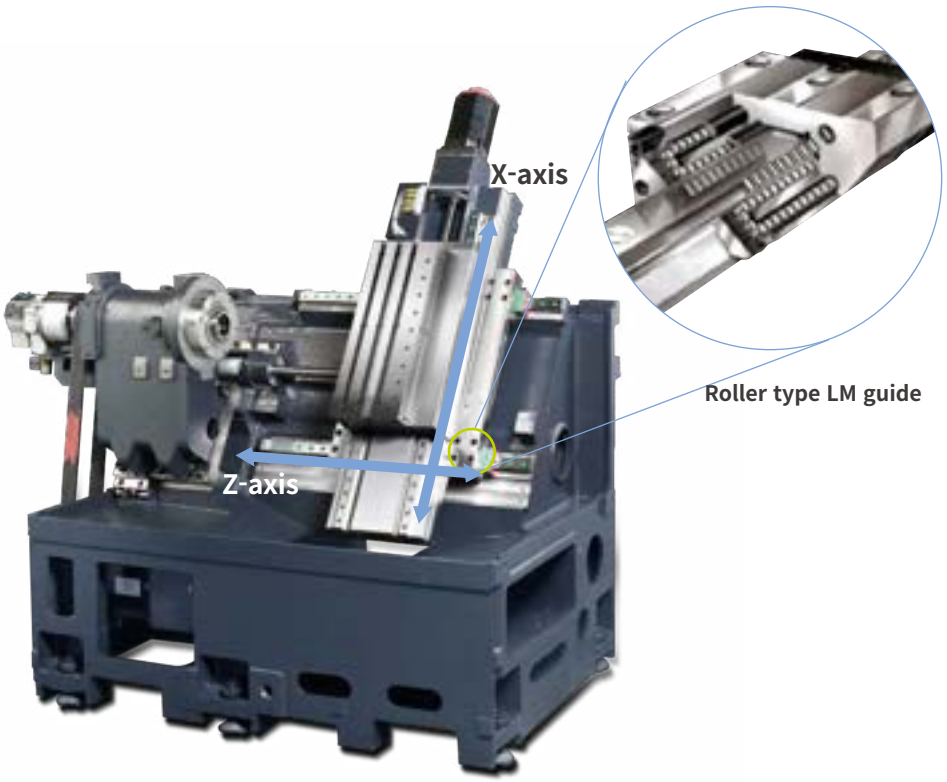

LARGEST MACHINING AREA

Ø170 X 330 mm maximum machining area and 51mm bar working diameter provide the largest machining capacity in the 6" chuck class.

Chuck size

6 inch

Machining area

Ø170 X 330 mm
6.7 x 13.0inch

Bar working diameter

45 {51 OPTION **}** mm
1.8 {2.0} inch

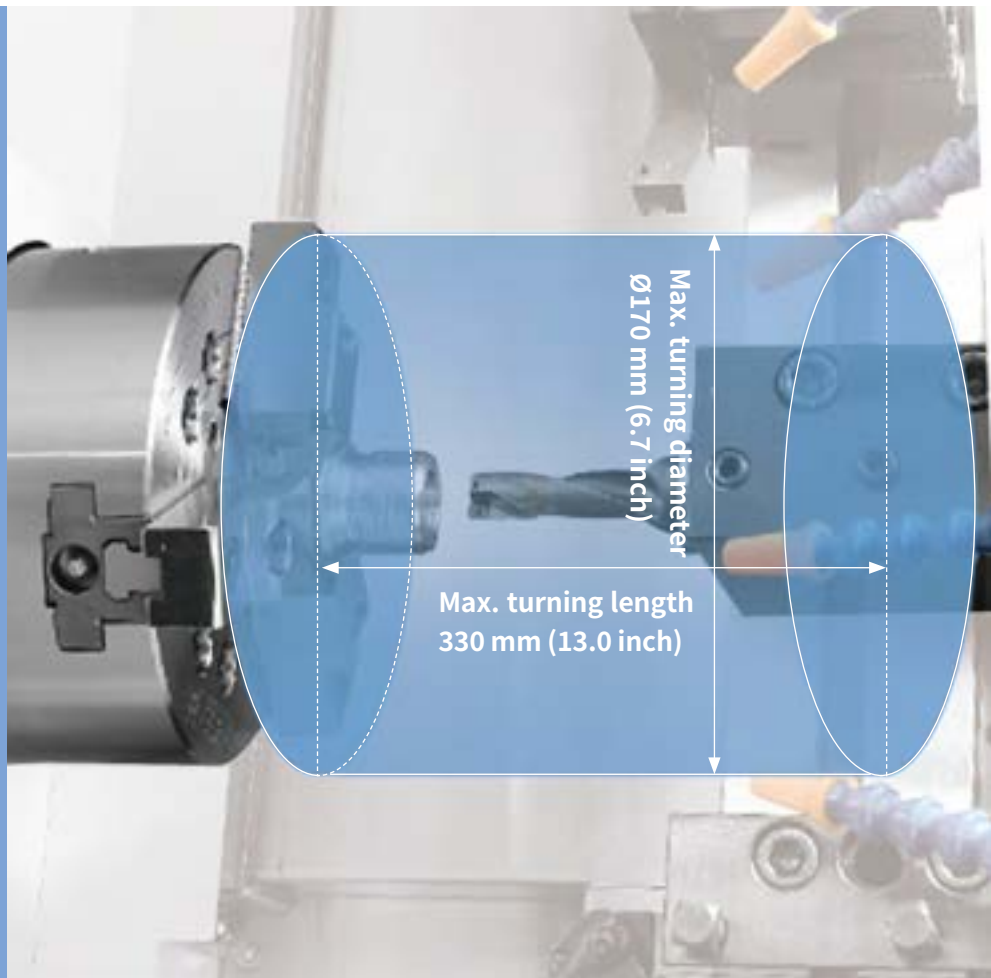

SPINDLE

By incorporating a powerful 18.5kW spindle with integrated thermal compensation into the machine, the Lynx 2100G delivers the highest levels of productivity irrespective of whether performing high precision or heavy duty cutting operations.

Max. speed

6000 r/min

Max. power

18.5 kW (Fanuc)
24.8 Hp

Max. torque

118 N·m (Fanuc)
87.1 lbf-ft

SPACE EFFICIENCY

The machine's compact structure makes it easy to install even in tight spaces.

Foot print

Min. **20** %

MACHINING PERFORMANCE

The machine's strong cutting performance ensures best-in-class productivity.

Material : Carbon Steel(SM45C)

Compared to previous model **15** % ↑

O.D turning	
Cutting speed (m/min (ipm))	358 (14094.5)
Feed (mm/rev (ipr))	0.3
Spindle speed (r/min)	1500
Cutting depth (mm (inch))	3.5 (0.1)
Chip removal rate (cm^3/min ($inch^3$/min))	393 (24.0)

Material : Carbon Steel(SM45C)

Finish I.D turning **4.0** D

I.D turning (Rough / Finish)	
Cutting speed (m/min (ipm))	200/200 (7874.0/7874.0)
Feed (mm/rev (ipr))	0.3/0.1(0.0/0.0)
Spindle speed (r/min)	863/798
Tool diameter (mm (inch))	40/40 (1.6/1.6)
Tool length (mm (inch))	3.5D/4.0D(0.1/0.2)

Material : Carbon Steel(SM45C)

Compared to previous model **15** % ↑

U-drilling	
Cutting speed (m/min (ipm))	80 (3149.6)
Feed (mm/rev (ipr))	0.15 (0.0)
U-drill dia.(mm (inch))	27 (1.1)
Chip removal rate (cm^3/min ($inch^3$/min))	179 (10.9)

MACHINING ACCURACY

Reduced vibration and compensating for and controlling thermal displacement ensure machining stability and longer tool life.

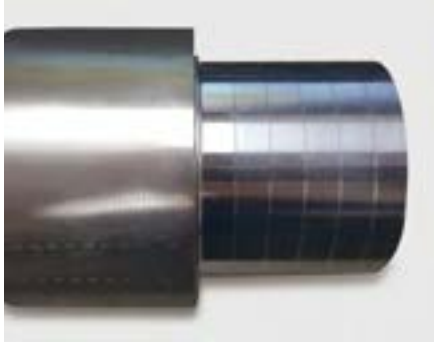

Material : Aluminium

Compared to previous model **60** % ↑

Roundness	
Cutting speed (m/min (ipm))	0.1 (0.0)
Feed (mm/rev (ipr))	0.2 (0.1)
Spindle speed (r/min)	4000
Roundness (μm)	0.7
Roughness (μm)	Ra 0.14

Material : Aluminium

Compared to previous model **45** % ↑

Ball machining roundness	
Roundness (μm)	0.7
Roughness (μm)	Ra 0.97

FULLY-CUSTOMIZED AUTOMATION

In order to get the most, and the best, from DN Solutions and to ensure that customers can achieve the highest levels of machining flexibility and productivity now and in the future, we can provide and integrate proven automation solutions to our machines, and help in the design and development of turnkey and process improvement solutions for customers.

Fixture

Chuck

Tool

Gantry loader

Robot

LPS (Linear pallet system)

Technical consultation

Investment feasibility studies

Application

Process design, manufacturing and testing

Technical validation

Differentiated engineering such as productivity and process reliability

Customer Support Process

Customer → Counseling application → Sales network → Technical meeting preceding proposal → Proposal → Technical meeting following agreement → Customer testing & delivery → Onsite installation & test operation

BEARING AUTOMATION SOLUTION

Optimized solution for the machining of bearings. Optimised load and unload system delivers unrivalled productivity.

Ball Bearing *Taper Bearing* *Thrust Bearing* *Ball Bushing Bearing*

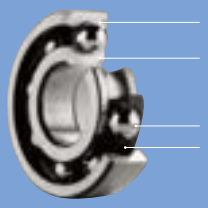

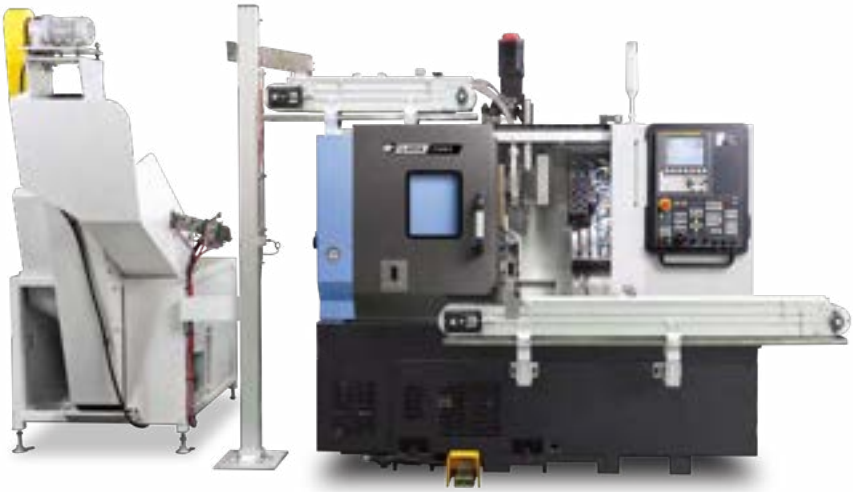

Improved bearing loading/unloading time

Previous model	4 ~ 5 sec
Lynx 2100G	**2.99** sec

50 % Improved

Workpiece range

INNER

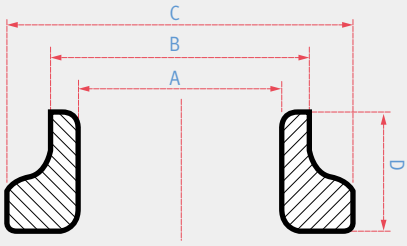

Group	A (Ø)	B (Ø)	C (Ø)	D (mm)
A	25 ~ 49	15 ~ 41	10 ~ 34	10~25
B	49 ~ 70	41 ~ 53	34 ~ 44	10~35
C	70 ~ 90	63 ~ 72	53 ~ 62	25~50

OUTER

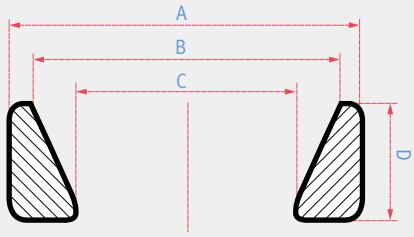

Group	A (Ø)	B (Ø)	C (Ø)	D (mm)
A	25 ~ 49	20 ~ 41	15 ~ 35	10~25
B	49 ~ 70	41 ~ 60	34 ~ 50	10~35
C	70 ~ 90	63 ~ 70	60 ~ 69	25~50

External dimensions

TOP VIEW

Unit : mm (inch)

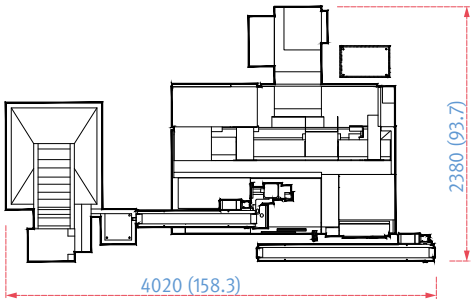

System configuration

❶ New Solution with Lynx 2100G
❷ Chip conveyor
❸ Transformer
❹ Hopper
❺ Elevator
❻ Upper conveyor
❼ Lower conveyor

FRONT VIEW

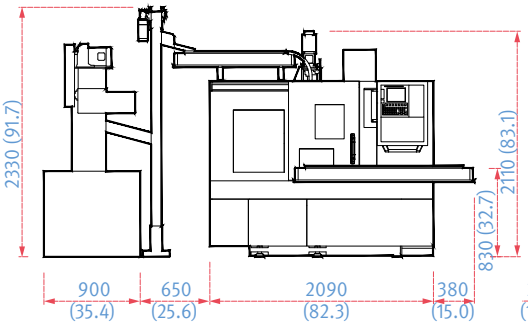

SIDE VIEW

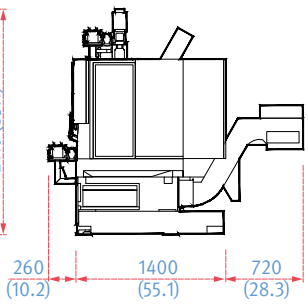

STANDARD | OPTIONAL SPECIFICATIONS

A range of options is available to suit individual requirements.

Description	Features	Lynx 2100G
chuck	6 inch	●
	8 inch	○
	No chuck	○
Jaw	Soft Jaw	●
	Hard Jaw	○
Chucking option	DUAL PRESSURE CHUCKING	○
	CHUCK CLAMP CONFIRMATION	○
Tailstock	No Tailstock	●
Coolant pump	1.0 bar	●
	Increase powe (4.5/7/10/14.5/20 bar)	○
Coolant options	Oil skimmer	○
	Coolant pressure switch	○
	Coolant level switch : Sensing level - Empty / Low / Enough / Full	○
	High Coolant Interface	○
	Chuck coolant	○
	Coolant gun	○
Chip disposal options	Rear type chip conveyor	○
	Side type chip conveyor	△
	Chip bucket	○
	Air blower	○
	Mist collector	○
Measuring & automation	Part catcher with parts boX	○
	Part catcher with parts conveyor	○
	Auto door	○
	Cut-Off Confirmation	○
	Work / Tool Counter	○
	Robot interface (PMC I/O, PROFIBUS)	○
	Bar feeder interface	○
Standard devices	Frontdoorinterlock	●
	Manualbook	●
	installationparts	●
	safety sticker	●
	Worklight	●
	Standard operation tools	●
	Footswitch	●
Others	Tool load monitoring system	○
	signal tower	○
	Air gun	○
	Air Conditioner For Electric Cabinet	○
	Light For Electric Cabinet	○
	EXtra M-Code (4ea)	○
	Automation power off	○
	Sketch-turn S/W	○
Customized Special Option	BALL SCREW NUT COOLING_X-AXIS	○
	AIR BLOWER FOR GANG TYPE TOOL HOLDER	○
	COOLANT CHILLER	○
	AUTO WORK MEASUREMENT_OLP40_RENISHAW	○
	CHIP CONVEYOR TYPE_SCREW	○
	AIR LIMIT SENSING ON CHUCK_PREPARATION	○
	WISKER SWITCH FOR CYCLE START	○
	AIR CHUCK PREPARATION	○
	MIST COLLECTOR_0.4KW	○
	MIST COLLECTOR_0.75KW	○
	TSC FOR MAIN/LEFT SPINDLE_ PREPARATION	○
	TSA FOR MAIN/LEFT SPINDLE_ PREPARATION	○

** Please contact DN Solutions to select detailed steady rest specifications*

● *Standard* ● *Optional* X *Not applicable*

⚠ Fire Safety Precautions | There is a high risk of fire when using non-water-soluble cutting fluids, processing flammable materials, neglecting the controlled and careful use of coolants and modifying the machine without the consent of the manufacturer. Always check the SAFETY GUIDELINES carefully before using the machine.

PERIPHERAL EQUIPMENT

Chip conveyor OPTION

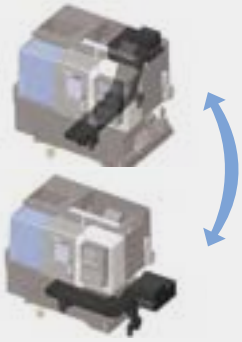

The chip conveyor can be configured in a side or rear layout to meet the demands of the work environment.

** In case of "Long chip" arising, technical consultation is required to check a condition of well-discharging chip disposal.*

Chip conveyor type	Material	Description
Hinged belt	Steel	Most typical type of chip conveyor. Appropriate for steel materials generating chips of length of 30 mm or more.
Screw (auger)	Steel	Chip conveyor with smallest footprint. Demands 80% of footprint comparing to hinged belt.
Magnetic scrapper	Cast iron	Chip conveyor with magnet equipped: Appropriate for cast iron workpieces generating fine chips.

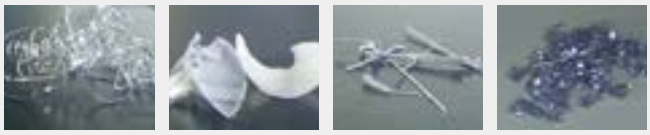

Long | Short | Needle | Sludge

Chip conveyor type \ Material	Carbon steel			Cast iron		Aluminium		
	Long	Short	Needle	Short	Needle	Long	Short	Needle
Hinged belt type*	○	△	X	△	X	○	△	X
Magnetic scrapper type**	X	○	△	○	△	X	○	△

○ : Suitable, △ : Possible, X : Not suitable

Hinged belt type*

Most common type of chip conveyor. Appropriate for steel materials generating chips over 30mm.

Drum filter type**

Chip conveyor with a magnet: Appropriate for machining cast iron and the generation of fine chips.

Grease lubrication system

Yearly maintenance cost

MAX. **80** %↓

The standard grease lubrication system eliminates the need for an oil skimmer and reduces lubrication costs by about 80% compared to oil lubrication.

Coolant chiller (recommended) OPTION

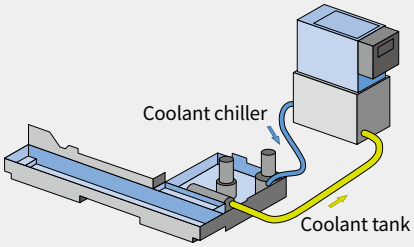

A coolant chiller is recommended to help prevent temperature rises and to reduce thermal deformation when using a water-insoluble coolant or high-pressure coolant system (i.e., power over 1.5kW).

Oil skimmer OPTION

The oil skimmer keeps coolant and lubricant isolated from each other to extend the lifecycle of coolant.

Dust collector OPTION

The dust collector absorbs airborne oil vapor and fine dust in the system to improve working environment.

Part catcher OPTION

The part catcher automatically accepts parts completed of machining, and ejects them out of the system.

Collet chuck OPTION

The collet chuck is ideal for loading workpiece of small diameter and light weight.

Coolant blower OPTION

Signal tower OPTION

Device to show present statuses of the machine.

DN SOLUTIONS FANUC i PLUS

DN Solutions Fanuc i Plus maximizes customer productivity and convenience.

15” Screen + New OP

DN Solutions Fanuc i Plus’ operation panel enhances operating convenience by incorporating common-design buttons and layout. It features a Qwerty keyboard for fast and easy data input and operation.

DN Solutions Fanuc i Plus

- 15-inch color display
- Intuitive and user-friendly design

USB and PCMCIA card QWERTY keyboard

- EZ-Guide i standard
- Ergonimic operator panel
- 2MB Memory
- Hot keys

iHMI touchscreen OPTION

iHMI provides an intuitive interface that uses a touchscreen for quick and easy operation.

Range of applications

Providing various applications related to planning, machining, improvement and utility, for customer convenience.

SKETCH-TURN OPTION

DN Solutions Conversational programming software for PC

- Easy to learn for beginners
- Time savings in programming
- Reduce processing cycle time

NUMERIC CONTROL SPECIFICATIONS

FANUC

Division	Item	Specifications	L2100G DN Solutions Fanuc i Plus
Controlled axis	Controlled axes		2(X,Z)
	Simultaneously controlled axes		2 axes
Data input/output	Fast data server		○
	Memory card input/output		●
	USB memory input/output		●
	Larger capacity memory_2GB	Note *2) Available Option only with 15" Touch LCD (iHMI Only)	○ *2)
Interface function	Embedded Ethernet		●
	Fast Ethernet		○
	Enhanced Embedded Ethernet function		●
Operation	DNC operation	Included in RS232C interface.	●
	DNC operation with memory card		●
Program input	Workpiece coordinate system	G52 - G59	●
Feed function	AI contour control I	G5.1 Q_, 40 Blocks	○
	AI contour control II	G5.1 Q_, 200 Blocks	○
Operation Guidance Function	EZ Guidei (Conversational Programming Solution)		●
	iHMI with Machining Cycle	Note *1) Only with 15" Touch LCD standard	○ *1)
	EZ Operation package		●
Setting and display	CNC screen dual display function		●
Network	FANUC MTConnect		✪
	FANUC OPC UA		✪
Others	Display unit	10.4" color LCD	X
		15" color LCD	●
		15" color LCD with Touch Panel	○
	Part program storage size & Number of registerable programs	640M(256KB)_500 programs	X
		5120M(2MB)_1000 programs	●

Network: FANUC MTConnect and FANUC OPC UA available.

● *Standard* ○ *Optional* X *N/A* ✪ *Available*

EZ-Guide i

Using the DN Solutions EZ-Guide i, users can create a cutting program for any desired shape, including patterns, by entering just the dimensions.

Example programming : Cutting shape

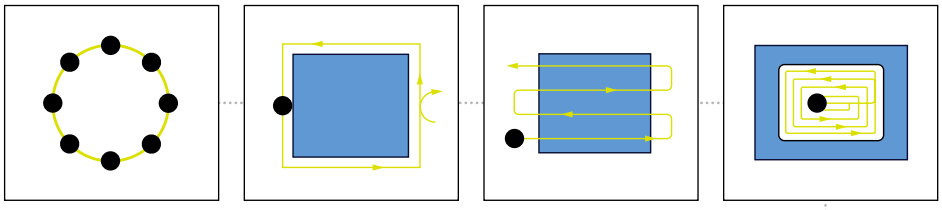

Example part

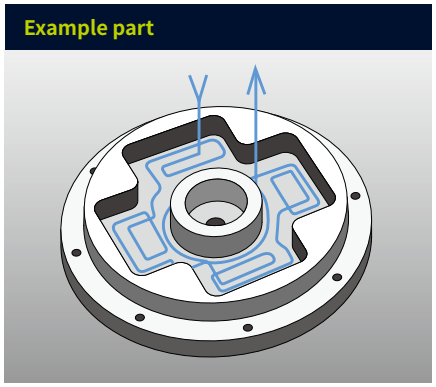

EZ-Guide i screen

Enter the dimensions of the shape

Automatic creation of cutting program

```
O7000 (SAMPLE PROGRAM) ;
...
M3 S1500 ;
G0 X50. Y125. ;
G0 Z30. ;
G1040 T0.5 J3. H0.2 K0.5 ... ;
G1020 H120. V50. U37. W68. ... ;
G0 Z80. ;
M5 ;
```

A cutting program is automatically created with the entered values.

EZ Work

DN Solutions's EZ Work supports the user with functions relating to tool data, error diagnostics, set up and machine monitoring.

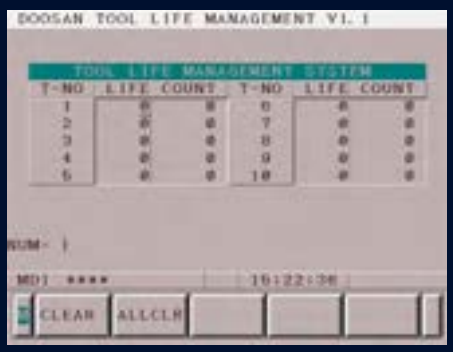

Tool life management
Enable to check tool life and counter function for each tooling in one screen.

Daily production count
Managing production volumes by counting the number of each machining program running on the machine.

Tool load monitoring
During cutting operation, abnormal load caused by wear or damage of the tool is detected and an alarm is triggered to prevent further damage.

POWER | TORQUE | TOOLING SYSTEM

DN Solutions Fanuc i Plus

Max. spindle speed : **600** r/min

Max Torque : **118** N·m
87.1 lbf-ft

Max. power : **18.5** kW
24.8 Hp

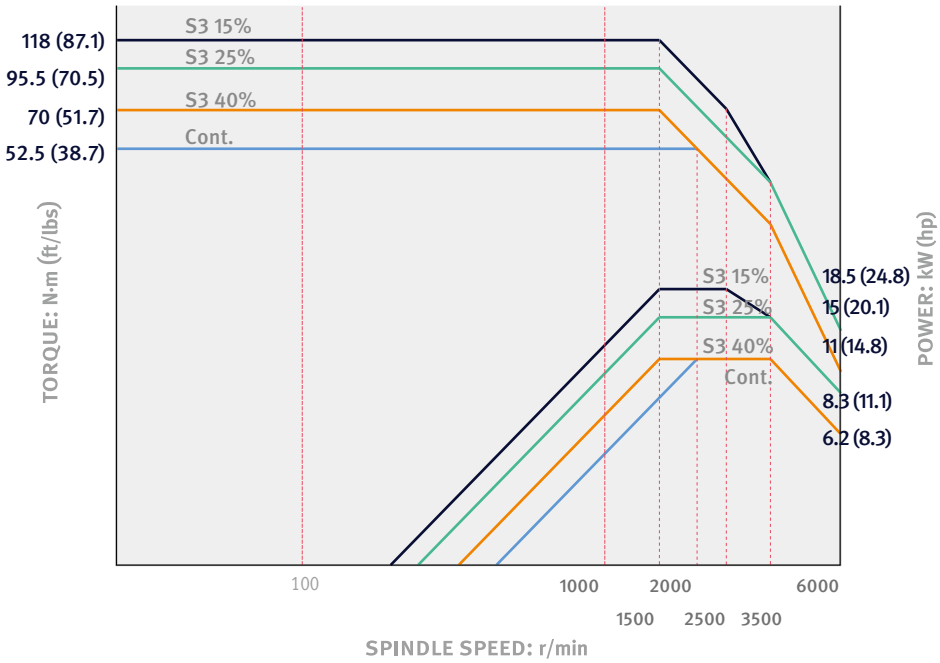

Unit : mm (inch)

Tooling system

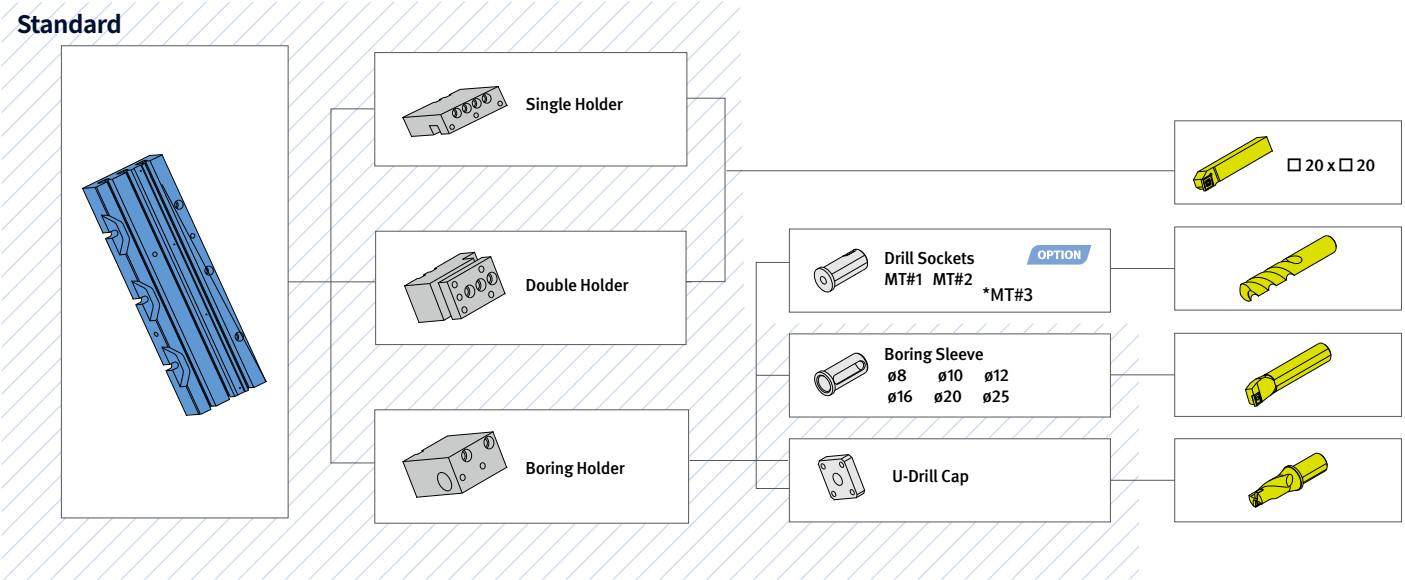

EXTERNAL DIMENSIONS

TOP

Unit : mm (inch)

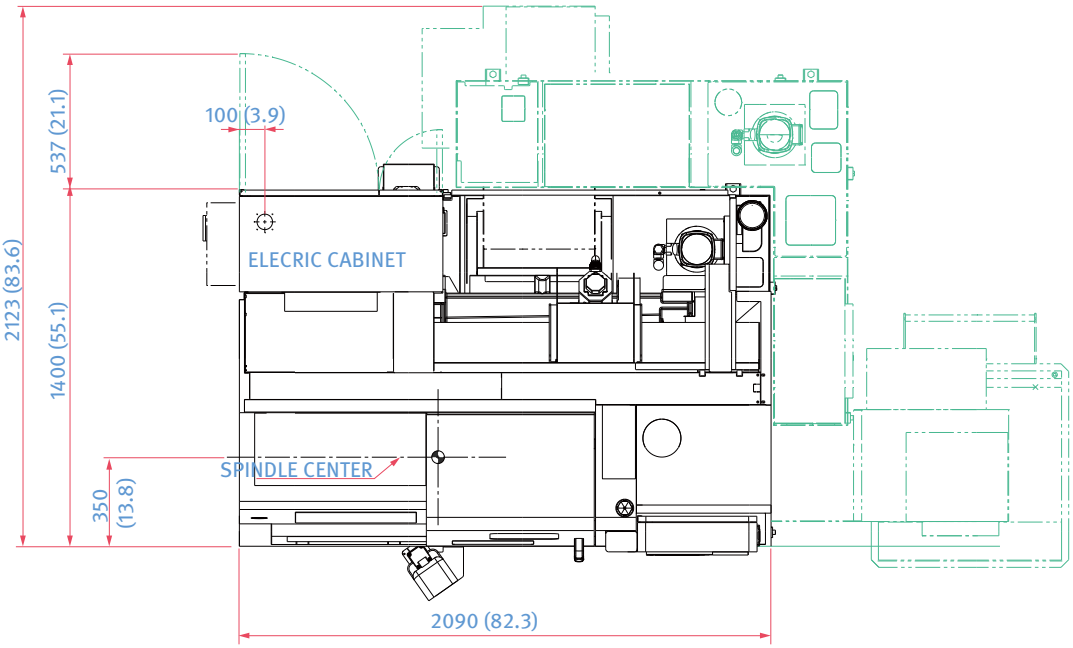

FRONT

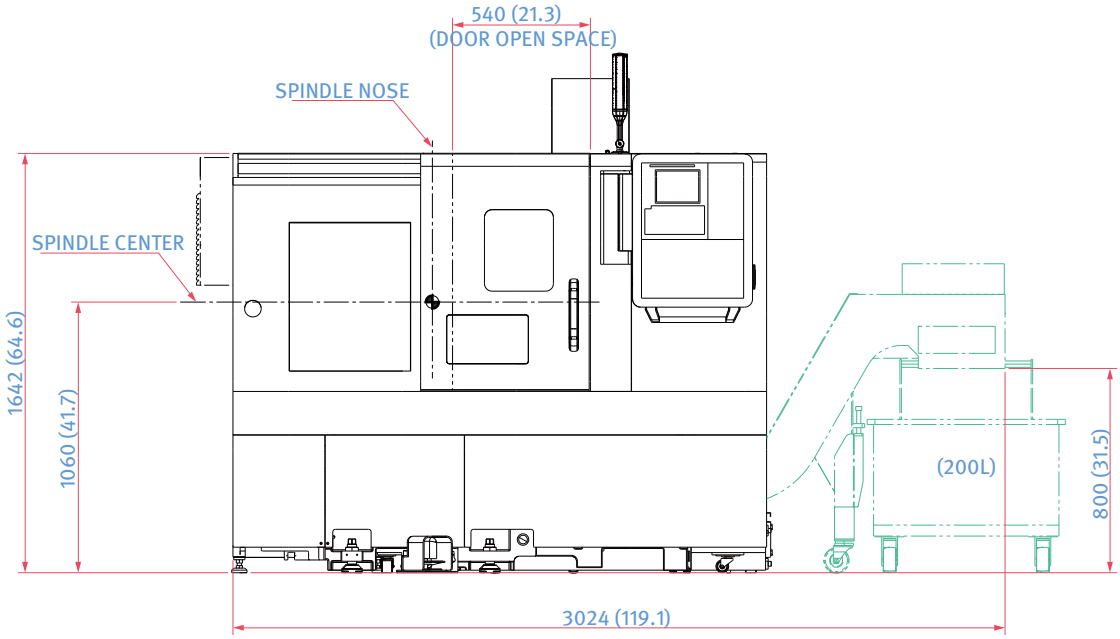

** Some peripheral equipment can be placed in other places.*

WORKING RANGE

Unit : mm (inch)

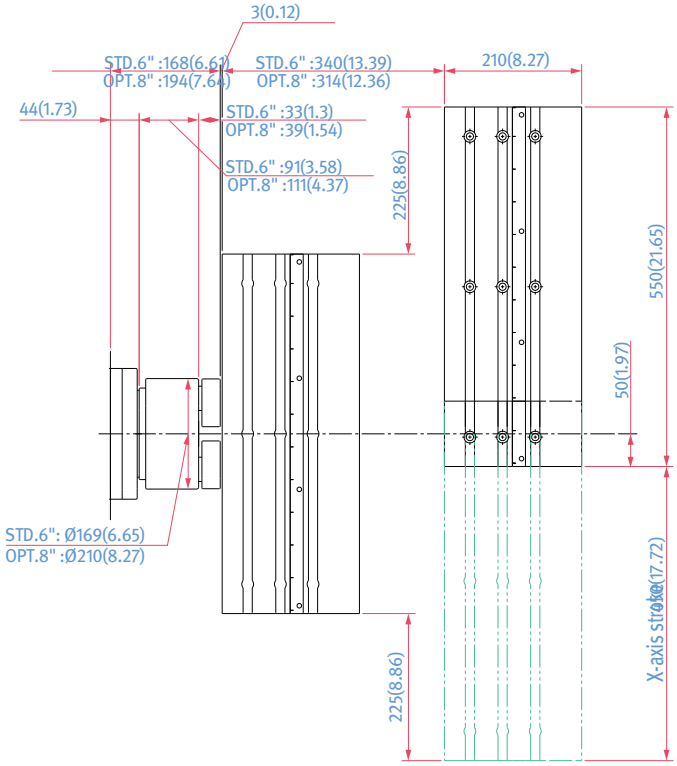

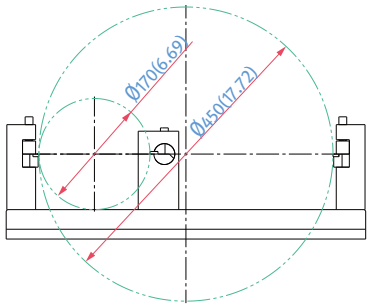

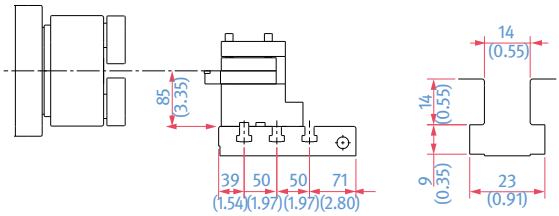

MACHINE SPECIFICATIONS

Description			Unit	LynX 2100G
Capacity	Swing over bed		mm (inch)	535 (21.1)
	MaX. Turning diameter		mm (inch)	170 (6.7)
	MaX. Turning length		mm (inch)	330 (13.0)
	Chuck size		inch	6 {8}*
	Bar working diameter		mm (inch)	45 {51}*
Travels	Travel distance	X aXis	mm (inch)	450 (17.7)
		Z aXis	mm (inch)	340 (13.4)
Feedrates	Rapid traverse rate	X aXis	m/min (ipm)	30 (1181.1)
		Z aXis	m/min (ipm)	36 (1417.3)
Spindle	MaX. Spindle speed		r/min	6000
	Main spindle motor power (S3 15%/S3 25%/Con.)		kW (Hp)	18.5/15/11 (24.8/20.1/14.8)
	MaX. Spindle Torque for Turning		N·m (ft-lbs)	118 (87.1)
	Spindle nose		ASA	A2-5
	Spindle bearing diameter (Front)		mm (inch)	90 (3.5)
	Spindle through hole diameter		mm (inch)	61 (2.4)
Tool post	Tool Holder Type		-	Gang Type
	OD tool size		mm (inch)	20 X 20 (0.8X0.8)
	MaX. boring bar size		mm (inch)	32 (1.3)
Power source	Electric power supply(rated capacity)		kVA	21.91
Machine Dimensions	Length		mm (inch)	2090 (82.3)
	Width		mm (inch)	1400 (55.1)
	Height		mm (inch)	1935 (76.2)
	Weight		kg (lb)	2900 (6393.3)
Control	CNC system		-	DN Solutions Fanuc i Plus

*{ }: Option

WHY DN SOLUTIONS

The DN Solutions promise, MACHINE GREATNESS, has two important meanings. The first is simple: DN Solutions makes great machines. The second is a challenge to our end-users. With a product line that is this comprehensive, accurate and reliable, we equip our customers to machine greatness. **The big question:** ***Why should you choose DN Solutions over other options?***

Here's why…

WHAT YOU MAKE AND HOW YOU MAKE IT MATTERS—SO MAKE IT GREAT WITH DN SOLUTIONS.

UNBEATABLE MACHINES

You won't find a more comprehensive range or a better combination of value, performance and reliability anywhere else.

READILY AVAILABLE - ANYWHERE IN THE WORLD

Machining centres (including 5-axis machines), lathes, multi-tasking turning centres and mill-turn machines, and horizontal borers with best-in-class specifications are all available…ready to install.

ROBUST PRODUCT LINE

We offer an impressive range of machine models and hundreds of configurations. Whatever your machining needs and requirements, there's a DN Solutions for you.

EXPERT SERVICE

Our dedicated, experienced and knowledgeable team is totally committed to improving your productivity, growth and success.

CUSTOMER SUPPORT AND SERVICES

We're there for you whenever you need us.

We help our customers operate at maximum efficiency by providing them with a range of tried, tested and trusted services - from pre-sales consultancy to post-sales support.

FIELD SERVICES

- On-site service
- Machine installation and testing
- Scheduled preventive maintenance
- Machine repair service

PARTS SUPPLY

- Supplying a wide range of original DN Solutions spare parts
- Parts repair service

TRAINING

- Programming, machine setup and operation
- Electrical and mechanical maintenance
- Applications engineering

TECHNICAL SUPPORT

- Supports machining methods and technology
- Responds to technical queries
- Provides technical consultancy

RESPONDING TO CUSTOMERS
ANYTIME, ANYWHERE

DN Solutions Global Network

DN Solutions provides systems-based professional support services, before and after the machine tool sale, by responding quickly and efficiently to customers. By supplying spare parts, product training, field service and technical support, we provide the expert care, attention and assistance our customers expect from a market leader.

Global sales and service support network

4	Corporations
156	Dealer networks
51	Technical centers Technical Center, Sales Support, Service Support, Parts Support
200	Service posts
3	Factories

dn-solutions.com

Head Office
22F T Tower, 30, Sowol-ro 2-gil
Jung-gu, Seoul, Korea, 04637
Tel +82-2-6972-0370/0350
Fax +82-2-6972-0400

DN Solutions America
19A Chapin Road, Pine Brook
New Jersey 07058, United States
Tel: +1-973-618-2500
Fax: +1-973-618-2501

DN Solutions Europe
Emdener Strasse 24, D-41540
Dormagen, Germany
Tel: +49-2133-5067-100
Fax: +49-2133-5067-111

DN Solutions India
No.82, Jakkuar Village
Yelahanka Hobil, Bangalore-560064
Tel: + 91-80-2205-6900
E-mail: india@dncompany.com

DN Solutions China
Room 101,201,301, Building 39 Xinzhuan
Highway No.258 Songjiang District
China Shanghai (201612)
Tel: +86 21-5445-1155
Fax: +86 21-6405-1472

Sales inquiry
sales@dncompany.com

* For more details, please contact DN Solutions.

* Specifications and information contained within this catalogue may be changed without prior notice.

DN SOLUTIONS

ver. EN 220518 SU