LARGE RAM-TYPE VERTICAL TURNING CENTER

PUMA VTR

1012F/FC • **1216**/M/F/FM/FC • **1620**/M • **2025**/M

Doosan Machine Tools

PUMA VTR SERIES·1012F/FC·1216/M/F/FM/FC·1620/M

The PUMA VTR Series offers the largest table diameter of Ø1250/1600/2000/2500mm (50.0/63.0/80.0 /98.4 inch) in its class. The machines' stability and high-productivity are complemented by their rigid design and wide-column structure.

The PUMA VTR Series provides the optimal solution for machining large components made from difficult-to-machine materials - such as aviation engine housings.

WIDE X-AXIS MOVING & MULTI-ENCLOSED COVER FOR MACHINING FLEXIBILITY

- Full X-axis travel with wide column structure provides a more spacious machining area
  PUMA VTR1012F (-575/+850mm),
  PUMA VTR1216/1216F (-700/+1000mm),
  PUMA VTR1620 (-800/+1420mm),
  PUMA VTR2025(-1000/+ 1640mm)
- Fully-covered and sealed multi-enclosed cover allows heavy-duty cutting without coolant and chip ingress.

HIGHER PRODUCTIVITY WITH RAM TOOL INDEXING SYSTEM AND ATC (AUTOMATIC TOOL CHANGER)

- 90° RAM indexing with a quad tool holder allows clamping of up to four turning tools and ID/OD/FACE machining without the need for additional tool changes.
- The automatic tool changer (ATC) solution mounting up to 60 tools, can improve productivity and efficiency, especially when machining difficult-to-machine materials like SUS (Stainless), Titanium, Inconel etc.

IMPROVED PRODUCTIVITY WITH POWERFUL CUTTING CAPABILITIES

- The high-strength Cr-Mo alloy steel RAM provides 8000kgf of tool clamping force, delivering durability and providing excellent heavy-duty machining performance

BASIC STRUCTURE

The largest machining area in its class guarantees high-productivity and optimised flexibility when machining large workpieces.

X-axis travel distance

PUMA VTR1012 series
1425(-575/+850) mm
56.1(-22.6/+33.5) inch

PUMA VTR1216 series
1700(-700/+1000) mm
66.9(-27.6/+39.4) inch

PUMA VTR1620 series
2220(-800/+1420) mm
87.4(-31.5/+55.9) inch

PUMA VTR12025/M
2640(-1000/+1640) mm
103.9(-39.4/+64.6) inch

W-axis travel distance

PUMA VTR1216/M
500 (250x2Step) mm
19.7 (9.8x2step) inch

PUMA VTR1620/M
840 (280x3Step) mm
33.1 (11.0x2Step) inch

PUMA VTR2025/M
1020(340x3Step) mm
40.2 (13.4x2Step) inch

Max. loading capacity

PUMA VTR1012 series
6000 kg 13227.5 lb

PUMA VTR1216 series
8000 kg 17636.7 lb

PUMA VTR1620 series
10000 kg 22045.9 lb

PUMA VTR2025 series
15000 kg 33068.9 lb

The W-axis can be selected for machining long shafts or for deep pocket machining

Featuring a wide, one-piece type bed and wide column design, and supported by a large capacity cooler, the PUMA VTR Series guarantees long, powerful, and stable machining performance.
Depending on workpiece length (height) and shape etc., a cross-rail fixed or movement type (W-axis) configuration is available.

Cross-rail movement type(W-axis)

PUMA VTR1216/M,
PUMA VTR1620/M

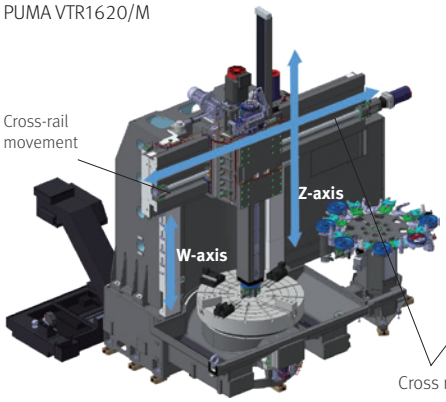

Cross-rail fixed type

PUMA VTR1012F/FC
PUMA VTR1216F/FC/FM

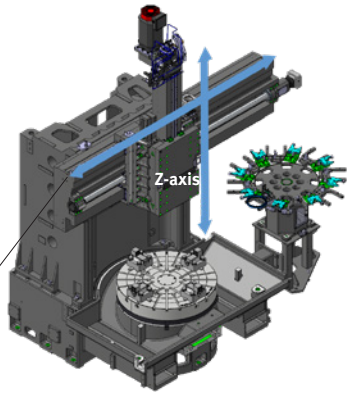

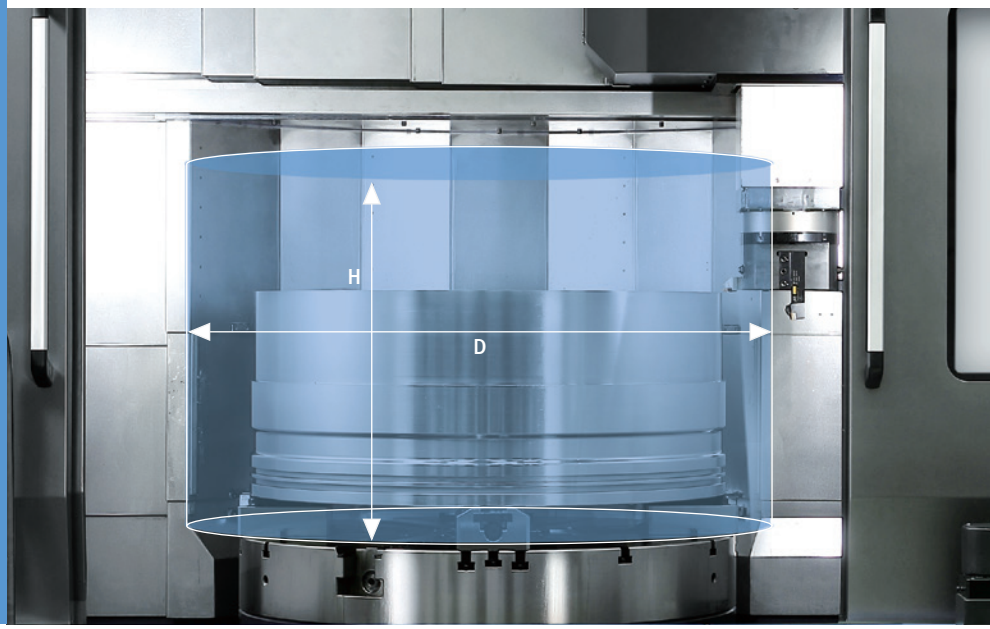

Unit : mm (inch)

Description	PUMA VTR1012F	PUMA VTR1012FC	PUMA VTR1216F	PUMA VTR1216FM	PUMA VTR1216FC	PUMA VTR1216	PUMA VTR1216M	PUMA VTR1620	PUMA VTR1620M	PUMA VTR2025	PUMA VTR2025M
Max. Turning Diameter (D)	1250 (49.2)		1600 (63.0)					2000 (78.7)		2500 (98.4)	
Max. Turning Height (H)	750 (29.5)	695 (27.4)	950 (37.4)		895 (35.2)	1250 (49.2)		1800 (70.9)		2000 (78.7)	

SPINDLE

Max. torque

PUMA VTR1012 series
19217 N·m option
14182.1 ft-lbs

PUMA VTR1216 series
31997 N·m option
23613.8 ft-lbs

PUMA VTR1620 series
38373 N·m option
28319.3 ft-lbs

PUMA VTR2025 series
46720 N·m option
34479.4 ft-lbs

Max. power

PUMA VTR1012 series
70 kW option
93.9 Hp

PUMA VTR1216/1620/2025 series
75 kW option
100.6 Hp

Spindle

Supplied with a high-capacity cooler as standard, the thermally-symmetrical spindle delivers reliable, stable and long-term precision machining.

RAM tool

The servo-driven tool magazine offers fast and accurate tool selection.

RAM size

260X260 mm
10.2 X 10.2 inch

Tool clamping force

8 ton
17637 lb

High productivity RAM indexing

The tool holder's 8 tons of clamping force is ideal for heavy-duty machining operations. Doosan's unique ram indexing and quad holder technologies enable the use of 4 tools, with a 90° rotation, without having to use the machine's ATC, thereby increasing overall productivity.
The automatic tool changer (ATC) solution mounting up to 60 tools, can also improve productivity and efficiency, especially when machining difficult-to-machine materials like SUS (Stainless), titanium, inconel etc.

Quad holder option

Up to 4 tools can be used in one set-up

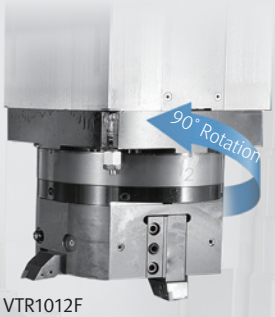

PUMA VTR1012F
PUMA VTR1216/M/F/FM
PUMA VTR1620/M
PUMA VTR2025/M

CAPTO holder (C6, C8 option)

Automatic exchange of up to 60 tools

PUMA VTR1012FC,
PUMA VTR1216FC

ATC TOOL MAGAZINE

The servo-driven ATC tool magazine enables fast and accurate tool selection.

Max. tool storage capacity

PUMA VTR1012F/1216F/1216/1620/2025

12, 24 ea option

Max. tool length

PUMA VTR1012F/1216F

460 mm
18.1 inch

PUMA VTR1216/1620/2025

500 mm
19.7 inch

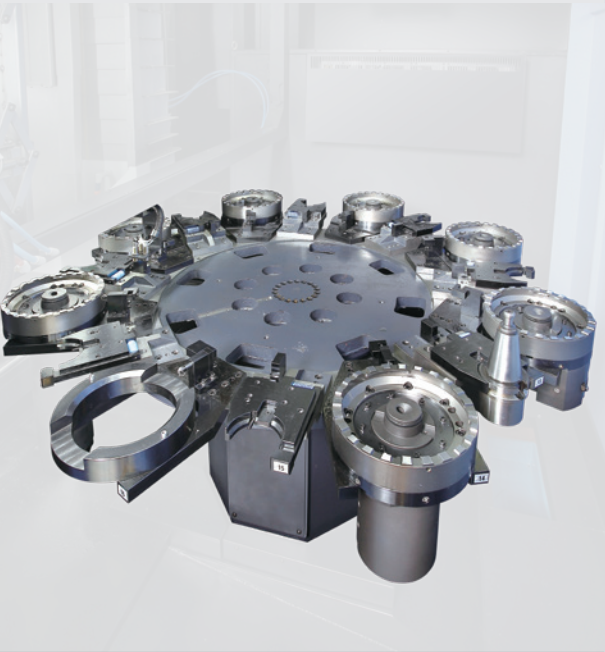

Max. tool storage capacity

PUMA VTR1216FM/1216M/1620M/2025M

15 ea
(7 for turning, 8 for milling, 1 for cap)

23 ea option
(11 for turning, 12 for milling, 1 for cap)

33 ea option
(12 for turning, 21 for milling, 1 for cap)

Max. tool length

PUMA VTR1216FM

460 mm (Turning)
18.1 inch

PUMA VTR1216M/1620M/2025M

500 mm (Turning)
19.7 inch

350 mm (Milling)
13.8 inch

Max. tool storage capacity

PUMA VTR1012FC/1216FC

60 ea

(Coromant Capto® C6, C8 option ,
Horizontal 30ea, Vertical 30ea)

MULTI-ENCLOSED COVER

The multi-enclosed cover, provided as standard, completely seals off all sides and the ceiling of the machine.

Efficient coolant and chip disposal

The disposal system prevents coolant and chips from blowing out of the machine, and the compact cover design is optimized for loading/unloading workpieces and for machine maintenance.

Linear scales

Linear scales are included as standard to help maintain high precision.

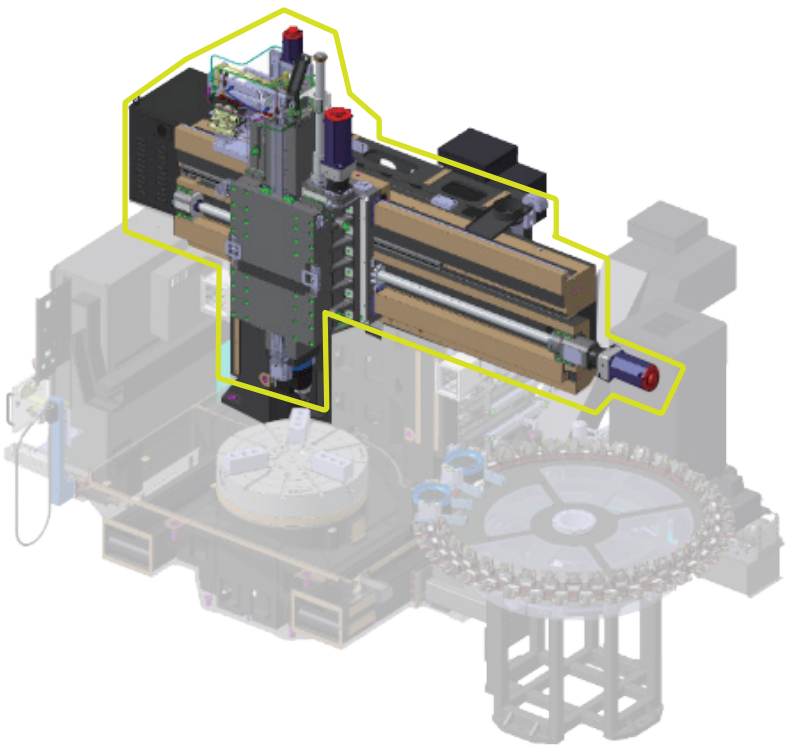

High accuracy

Linear scales on the X- and Z-axes (cross-rail fixed models) and on the W-axis (cross-rail movement type) are available.

STANDARD | OPTIONAL SPECIFICATIONS

A range of options is available to suit individual requirements.

Description	Features	PUMA VTR1012F	PUMA VTR1012FC	PUMA VTR1216F	PUMA VTR1216FC	PUMA VTR1216FM	PUMA VTR1216	PUMA VTR1216M	PUMA VTR1620	PUMA VTR1620M	PUMA VTR2025	PUMA VTR2025M
Main spindle	45/37 kW, 12354 N·m	●	●	X	X	X	X	X	X	X	X	X
	45/37 kW, 20557 N·m	X	X	●	●	●	●	●	X	X	X	X
	45/37 kW, 24668 N·m	X	X	X	X	X	X	X	●	●	X	X
	70/45/37 kW, 19217 N·m	○	○	X	X	X	X	X	X	X	X	X
	70/45/37 kW, 31997 N·m	X	X	○	○	○	○	○	X	X	X	X
	70/45/37 kW, 38373 N·m	X	X	X	X	X	X	X	○	○	X	X
	75/60 kW, 31147 N·m	X	X	X	X	○	X	○	X	X	X	X
	75/60 kW, 37376 N·m	X	X	X	X	X	X	X	X	○	X	X
	75/60 Kw, 46720 N·m	X	X	X	X	X	X	X	X	X	●	●
Chuck	NONE	○	○	○	○	○	○	○	○	○	○	○
	1000 mm_Manual_4-JAW	●	●	X	X	X	X	X	X	X	X	X
	1000 mm_Power 3-JAW	○	○	X	X	X	X	X	X	X	X	X
	1250 mm_Manual 4-JAW	X	X	●	●	●	●	●	X	X	X	X
	1250 mm_Power 3-JAW	X	X	○	○	○	○	○	X	X	X	X
	1250 mm_Combination	X	X	○	○	○	○	○	X	X	X	X
	1400 mm_Manual 4-JAW	X	X	○	○	○	○	○	X	X	X	X
	1400 mm_Power 3-JAW	X	X	○	○	○	○	○	X	X	X	X
	1400 mm _Combination	X	X	○	○	○	○	○	X	X	X	X
	1600 mm _Manual	X	X	X	X	X	X	X	●	●	X	X
	1600 mm_Power 3-JAW	X	X	X	X	X	X	X	○	○	X	X
	1600 mm_Combination	X	X	X	X	X	X	X	○	○	X	X
	1800 mm_Manual 4-JAW	X	X	X	X	X	X	X	○	○	X	X
	1800 mm_Power 3-JAW	X	X	X	X	X	X	X	○	○	X	X
	1800 mm_Combination	X	X	X	X	X	X	X	○	○	X	X
	2000mm_Manual_4-JAW	X	X	X	X	X	X	X	X	X	●	●
	2000mm_Power_3-JAW	X	X	X	X	X	X	X	X	X	○	○
	2000mm_Combination	X	X	X	X	X	X	X	X	X	○	○
	2300mm_Manual_4-JAW	X	X	X	X	X	X	X	X	X	○	○
Soft top jaws	None	●	●	●	●	●	●	●	●	●	●	●
	Manual-4 ea(1 set)	○	○	○	○	○	○	○	○	○	○	○
	Manual-8 ea(2 set)	○	○	○	○	○	○	○	○	○	○	○
	Combination-7 ea(1 set)	X	X	○	○	○	○	○	○	○	○	○
	Combination-14 ea(2 set)	X	X	○	○	○	○	○	○	○	○	○
	Power-3 ea(1 set)	○	○	○	○	○	○	○	○	○	○	○
	Power-6 ea(2 set)	○	○	○	○	○	○	○	○	○	○	○
Hard top jaws	None	●	●	●	●	●	●	●	●	●	●	●
	Manual-4 ea(1 set)	○	○	○	○	○	○	○	○	○	○	○
	Combination-7 ea(1 set)	X	X	○	○	○	○	○	○	○	○	○
	Power-3 ea(1 set)	○	○	○	○	○	○	○	○	○	○	○
Tool shank type	Big Plus BT50	X	X	X	X	●	X	●	X	●	X	●
	Big Plus CAT50	X	X	X	X	○	X	○	X	○	X	○
	Big Plus DIN50	X	X	X	X	○	X	○	X	○	X	○
ATC	12ea	●	X	●	X	X	●	X	●	X	●	X
	24ea	○	X	○	X	X	○	X	○	X	○	X
	60ea(CAPTO C6)	X	●	X	●	X	X	X	X	X	X	X
	60ea(CAPTO C8)	X	○	X	○	X	X	X	X	X	X	X
	15ea(Turning-7ea/Milling-8ea/CAP-1ea)	X	X	X	X	●	X	●	X	●	X	●
	23ea (Turning-11ea/Milling-12ea/CAP-1 ea)	X	X	X	X	○	X	○	X	○	X	○
	33ea (Turning-12ea/Milling-21ea/CAP1 ea)	X	X	X	X	○	X	○	X	○	X	○
Coolant pump	1.1 kW_0.7 Mpa_32 L/min	●	●	●	●	●	●	●	●	●	●	●
	1.1 kW_1.0 Mpa_20 L/min	○	○	○	○	○	○	○	○	○	○	○
	2.2 kW_2.0 Mpa_20 L/min	○	○	○	○	○	○	○	○	○	○	○
	3.7 kW_3.0 Mpa_33 L/min	○	○	○	○	○	○	○	○	○	○	○
	7.5 kW_7.0 Mpa_29 L/min	○	○	○	○	○	○	○	○	○	○	○
	15 Mpa (150bar, need tech. discussion in advance)	X	○	X	○	X	X	X	X	X	X	X
Coolant options	High coolant interface	○	○	○	○	○	○	○	○	○	○	○
	Oil Skimmer (Belt type)	○	○	○	○	○	○	○	○	○	○	○
	Coolant flow switch	○	○	○	○	○	○	○	○	○	○	○
	Coolant level switch : Sensing level - low	○	○	○	○	○	○	○	○	○	○	○
Chip disposal options	NONE	●	●	●	●	●	●	●	●	●	○	○
	Rear exit _Hinged belt rear chip conveyor	○	○	○	○	○	○	○	○	○	X	X
	Rear exit _Magnetic scrapper rear chip conveyor	○	○	○	○	○	○	○	○	○	X	X
	Front_Hinged belt rear chip conveyor	X	X	X	X	X	X	X	X	X	●	●
	Front_Magnetic scrapper rear chip conveyor	X	X	X	X	X	X	X	X	X	○	○
	Chip bucket_Folklift 380L	○	○	○	○	○	○	○	○	○	○	○
	Chip bucket_Rotation 380L	○	○	○	○	○	○	○	○	○	○	○
	Chip bucket_Folklift 600L	○	○	○	○	○	○	○	○	○	○	○
	Coolant gun	○	○	○	○	○	○	○	○	○	○	○
Measurement & automation	Automatic workpiece measurement RMP60_RENISHAW	○	○	○	○	○	○	○	○	○	○	○
	Automatic front door and safety devices	○	○	○	○	○	○	○	○	○	○	○
	Tool setter (Auto)	○	○	○	○	○	○	○	○	○	○	○
	ACC (2 station)	○	○	○	○	○	○	○	○	○	X	X
	ACC (Customizing)	Please, contact Doosan on further information.										
Optional accessories	Multi enclosed cover	●	●	●	●	●	●	●	●	●	●	●
	Doosan tool load monitoring system	●	●	●	●	●	●	●	●	●	●	●
	Linear scale (X / Z axis)	●	●	●	●	●	●	●	●	●	●	●
	Auto power off	○	○	○	○	○	○	○	○	○	○	○
	Gravity axis drop prevention	●	●	●	●	●	●	●	●	●	●	●
	Air conditioner	○	○	○	○	○	○	○	○	○	○	○
	Lubricant drop prevention decive	○	○	○	○	○	○	○	○	○	○	○

** When chuck specification needs to be changed, it may be necessary to replace the chuck cylinder that matches the chuck specification*

● *Standard* ○ *Optional* X *Not applicable*

Fire Safety Precautions

There is a high risk of fire when using non-water-soluble cutting fluids, processing flammable materials, neglecting the controlled and careful use of coolants and modifying the machine without the consent of the manufacturer. Always check the SAFETY GUIDELINES carefully before using the machine.

PERIPHERAL EQUIPMENT

Table chuck option

Various types of table chucks are offered, including manual type and hydraulic type.

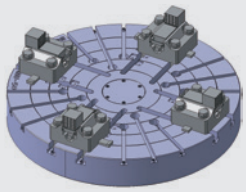

Manual chuck

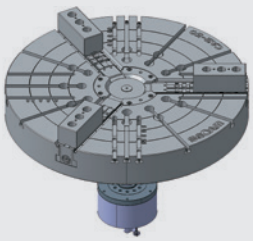

Hydraulic chuck

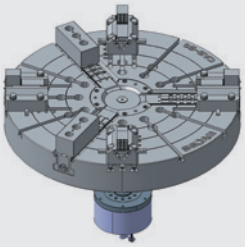

Manual & Hydraulic combination chuck

Internal foot rest

Internal foot rest is available for convenient setting and maintenance.

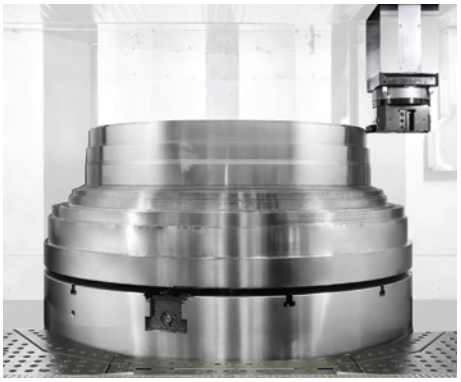

Rear exit chip conveyor option

Smooth chip disposal is guaranteed with the one-piece-type bed supplied with chip discharge channels (on both sides of the table), and rear exit dual chip conveyors.

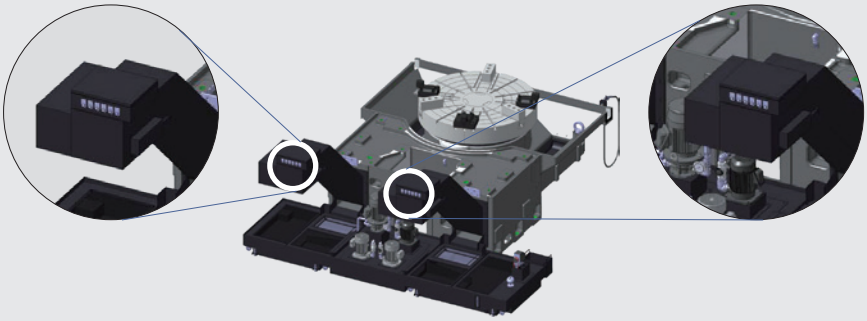

Automatic tool setter option

The device automatically measures tool length and diameter, detects tool wear and calculates the offset to improve machining accuracy.

Various tool options option

Tool options include a 90°angle attachment and a grinding unit. The selected tool is driven by the milling spindle motor (M models only).

Angle att.

Max. speed : 3000 r/min
Max. torque : 674 N·m
Through tool coolant : Max. 70bar

Grinding unit

Grinding wheel : Ø305 mm
Max. speed : 3000 r/min

150 bar high pressure TTC (Through tool coolant) option

Maintaining low temperatures and ensuring quick and effective chip disposal increase productivity, especially when machining difficult-to-machine materials (PUMA VTR1012FC, 1216FC).

ACC (Auto Chuck Changer) option (PUMA VTR1012/1216/1620 series)

ACC is auto chuck changer which can save the set-up time and loading/unloading time. Thus it will improve the productivity. There is a sub OP to operate by hand. So you can check where the chuck position is by the screen. It is easy to operate with 10.4" touch-panel that shows the same station position with real machine.
(Main unit : Special chuck for ACC 2 EA, Set up station & platform, Parking station, Loader station, Spindle receiver unit, Sub OP for ACC)

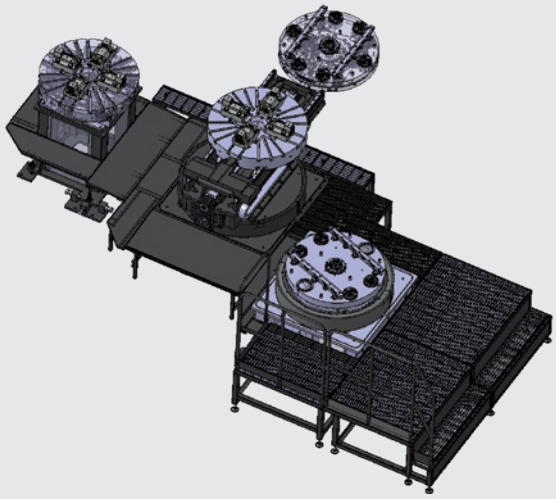

Description	PUMA VTR1012 series	PUMA VTR1216 series	PUMA VTR1620 series
No. of Station	2	2	2
Max. allowance workpiece weight	4000 kg (8818.4 lb)	6000 kg (13227.5 lb)	8000 kg (17636.7 lb)

** If you want to customize the number of station, please contact Doosan.*

Operation Panel for ACC with 10" touch screen

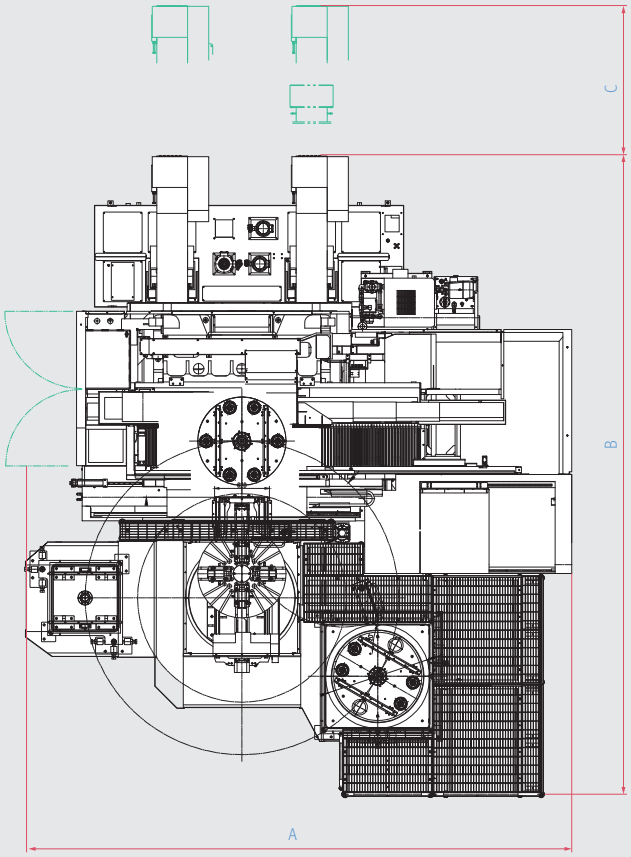

Unit : mm (inch)

Description	A	B	*C
PUMA VTR1012 series	6185 (243.5)	7230 (284.6)	1700 (66.9)
PUMA VTR1216 series	6410 (252.4)	7650 (301.2)	1700 (66.9)
PUMA VTR1620 series	7870 (309.8)	8940 (352.0)	3000 (118.1)

** C : Space for chip conveyor maintenance*
*** If you adapt the ACC option the machining range is changed because of height of the special chuck.*

DOOSAN FANUC i PLUS

Doosan Fanuc i Plus maximizes customer productivity and convenience.

15” Screen + New OP

Doosan Fanuc i Plus’ operation panel enhances operating convenience by incorporating common-design buttons and layout. It features a qwerty keyboard for fast and easy data input and operation.

Doosan Fanuc i Plus

- 15-inch color display
- Intuitive and user-friendly design

USB and PCMCIA card QWERTY keyboard

- EZ-guide i standard
- Ergonimic operator panel
- 2MB memory
- Hot keys

iHMI touchscreen OPTION

iHMI provides an intuitive interface that uses a touchscreen for quick and easy operation.

Range of applications

Providing various applications related to planning, machining, improvement and utility, for customer convenience.

Display

- Crossrail position
- Tool No. display
- Head index No.

- Tool head rotation button

The operation panel can be raised, lowered, and swivelled for operating convenience.

NUMERIC CONTROL SPECIFICATIONS

FANUC

	Description	Features	Doosan Fanuc i (F0i-F Plus)	
			2-Axis	M
Controlled axis	Controlled axes		2 (X, Z)	3 (X, Z, C)
	Simultaneously controlled axes		2 axes	3 axes
Data input/output	data server		○	○
	Memory card input/output		●	●
	USB memory input/output		●	●
Interface function	Embedded ethernet		●	●
	Fast ethernet		○	○
	Enhanced embedded ethernet function		●	●
Operation	DNC operation	Included in RS232C interface.	●	●
	DNC operation with memory card		●	●
Program input	Workpiece coordinate system	G52 - G59	●	●
Feed function	AI contour control I	G5.1 Q_, 40 Blocks	●	●
	AI contour control II	G5.1 Q_, 200 Blocks	○	○
Operation guidance function	EZ Guidei (Conversational programming solution)		●	●
	iHMI with machining cycle	Note *1) Only with 15" touch LCD standard	○ *1)	○ *1)
	Multi path function	Supporting 2 or 3 path machine	●	●
	EZ Operation package		●	●
Setting and display	CNC screen dual display function		●	●
Network	FANUC MTConnect		✪	✪
	FANUC OPC UA		✪	✪
Others	Display unit	15" color LCD	●	●
		15" color LCD with touch panel	○	○
	Part program storage size & Number of registerable programs	5120M(2MB)_1000 programs	●	●
	Dual position feedback		X	●
	Pitch error compensation		●	●

● *Standard* ○ *Optional* X *Not applicable* ✪ *Available*

DOOSAN FANUC i PLUS

EZ-Guide i

Using the Doosan EZ-Guide i, users can create a cutting program for any desired shape, including patterns, by entering just the dimensions.

Example programming : Cutting shape

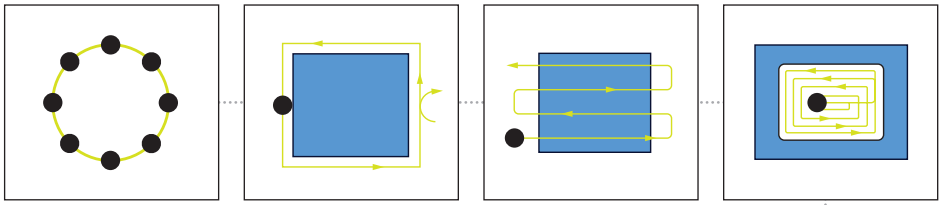

Collet chuck

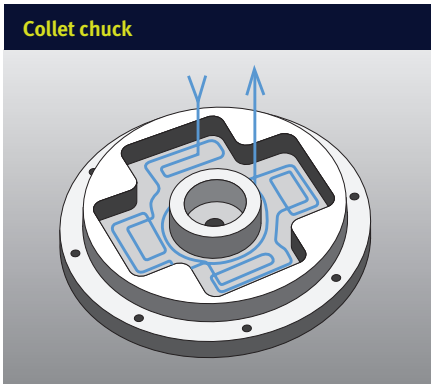

EZ-Guide i screen

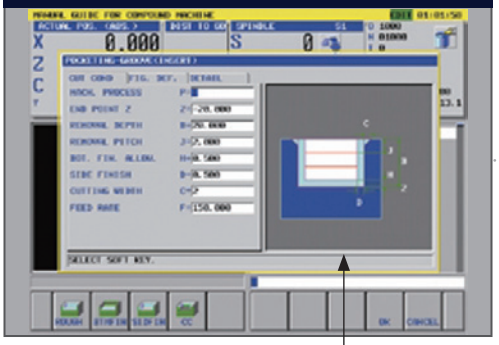

Enter the dimensions of the shape.

Automatic creation of cutting program

```
O7000 (SAMPLE PROGRAM) ;
...
M3 S1500 ;
G0 X50. Y125. ;
G0 Z30. ;
G1040 T0.5 J3. H0.2 K0.5 ... ;
G1020 H120. V50. U37. W68. ... ;
G0 Z80. ;
M5 ;
```

A cutting program is automatically created with the entered values.

EZ WORK

Doosan's unique EZ WORK offers tool management function, peripheral device settings, operation, online help, and other functionalities to maximize operational efficiency and user convenience.

Tool Load Monitoring

- Detection function to prevent before tool wear and tool breakage
- Set up and show each tool's load

ATC position compensation

- Tool position change and offset are displayed and set up.
- Easy compensation and prevention against deformation/displacement by long-term operation, etc.

Thermal error compensation (M-series)

- Improved accuracy with thermal displacement compensation
- Real-time-based machine temperature monitoring

POWER | TORQUE

Milling spindle

PUMA VTR1216M/1216FM
PUMA VTR1620M

Max speed of live tool
3000 r/min

Max power of live tool
18.5 kW
24.8 Hp

Max. torque
674 N·m
497.4 ft-lbs

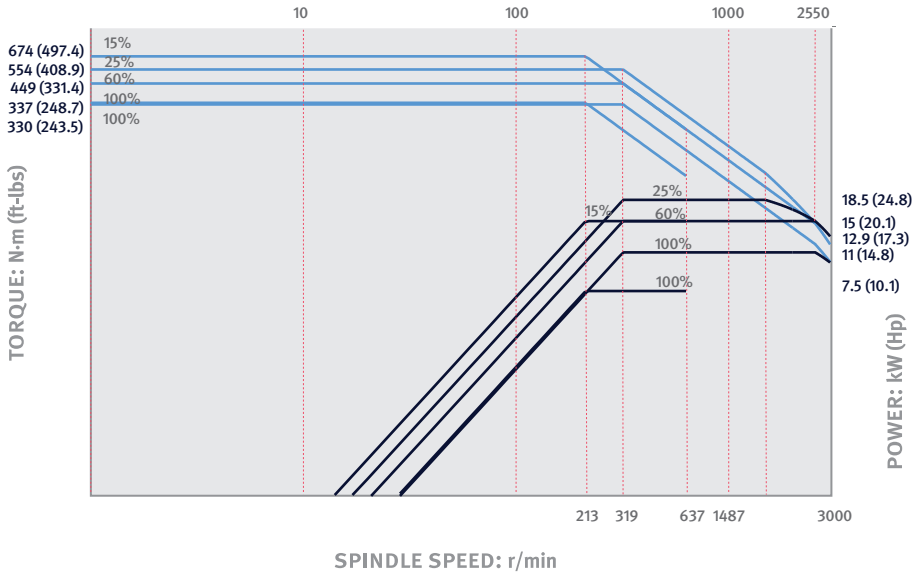

PUMA VTR1216M/1216FM
Gearbox option

Max speed of live tool
3000 r/min

Max power of live tool
25 kW
33.5 Hp

Max. torque
1273 N·m
939.5 ft-lbs

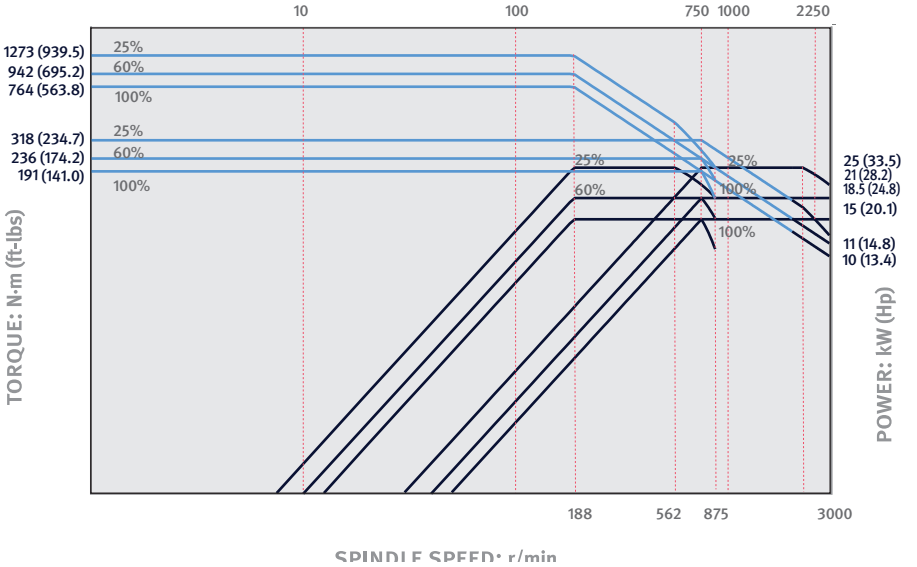

PUMA VTR1620M /2025M
Gearbox option

Max speed of live tool
3000 r/min

Max power of live tool
35 kW
46.9 Hp

Max. torque
1782 N·m
1315.1 ft-lbs

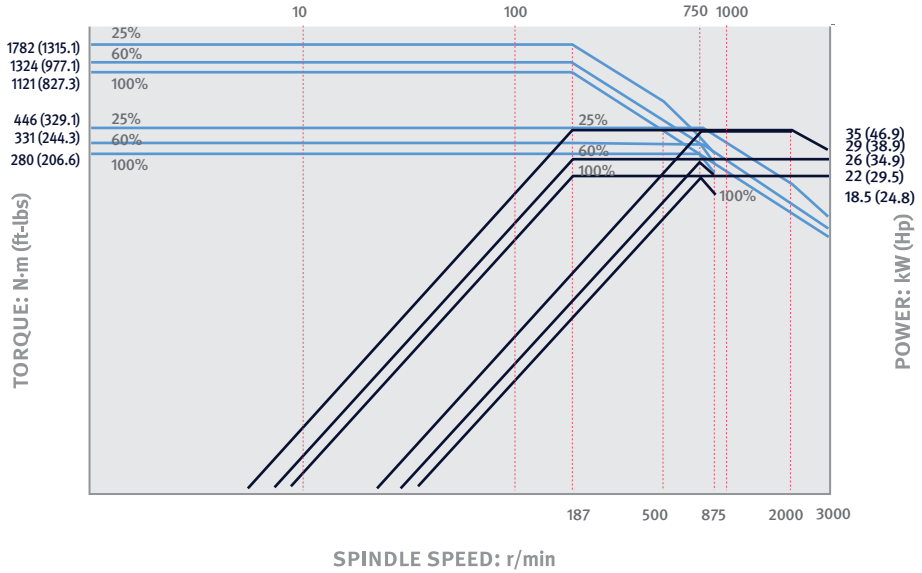

POWER | TORQUE

Main Spindle

PUMA VTR1012F/FC

Max. speed
600 r/min

Max. power
45 kW
60.3 Hp

Max. torque
12354 N·m
9117.3 ft-lbs

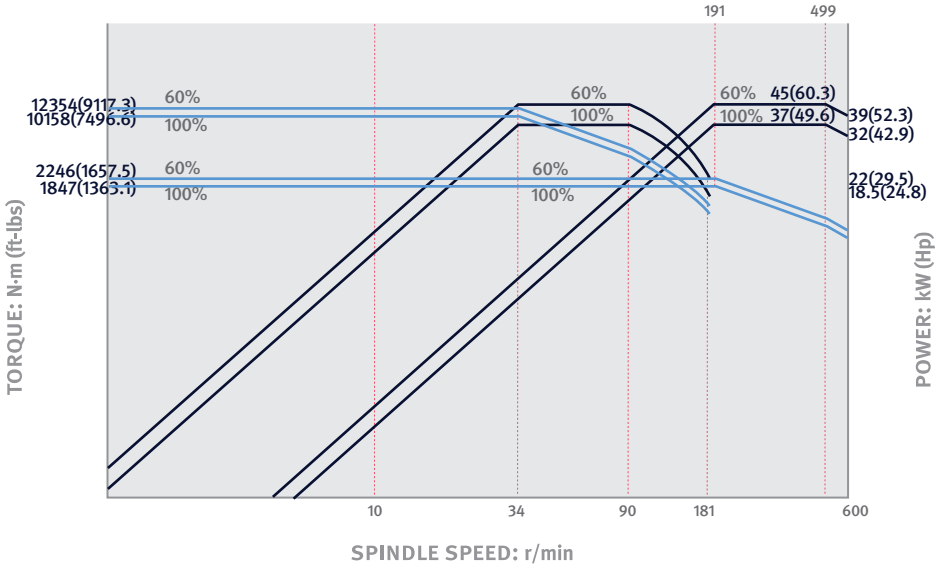

PUMA VTR1012F/FC 선택

Max. speed
600 r/min

Max. power
70 kW
93.9 Hp

Max. torque
19217 N·m
14182.1 ft-lbs

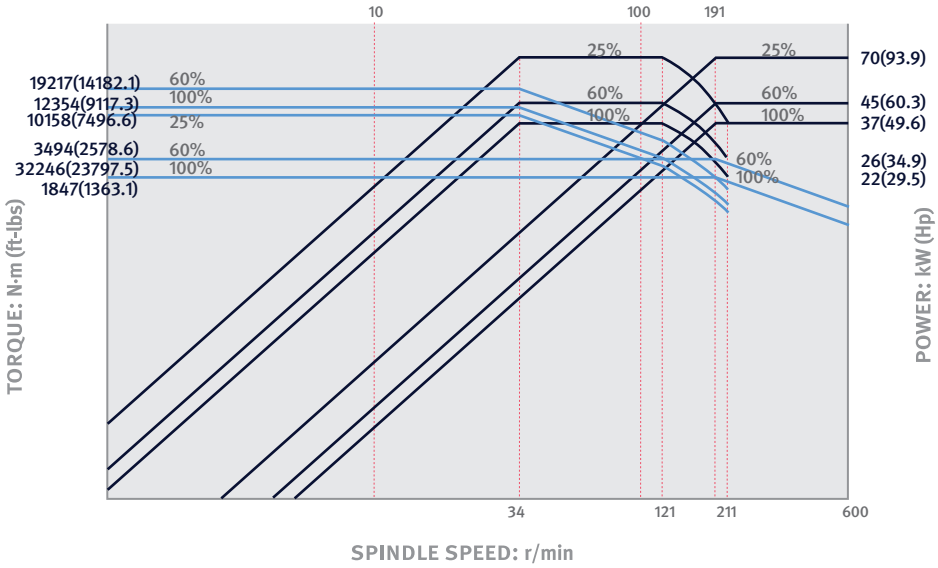

PUMA VTR2025/M

Max. speed
200 r/min

Max. power
75 kW
100.6 Hp

Max. torque
46720 N·m
34479.4 ft-lbs

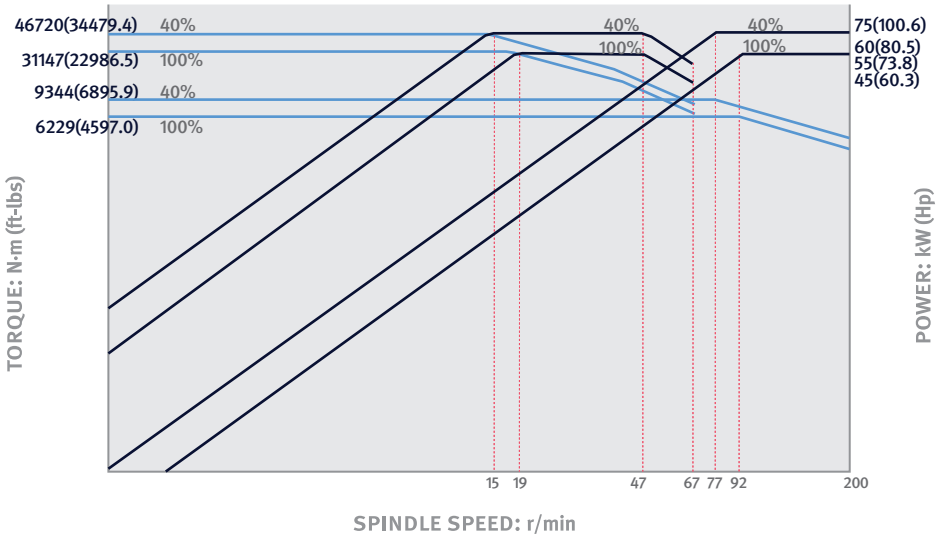

POWER | TORQUE

Main Spindle

PUMA VTR1216/M/F/FM/FC

Max. speed
400 r/min

Max. power
45 kW
60.3 Hp

Max. torque
20557 N·m
15171.1 ft-lbs

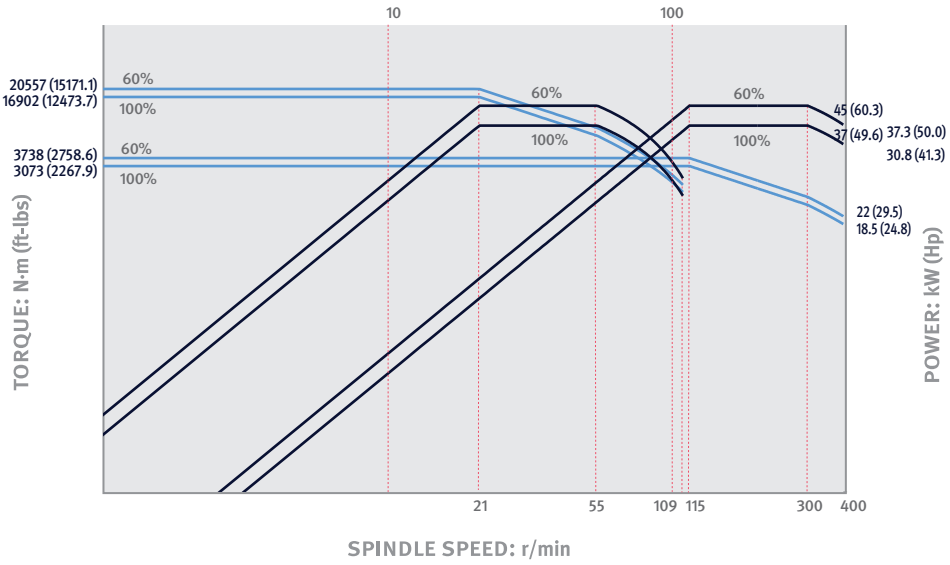

PUMA VTR1216/M/F option
PUMA VTR1216FM/FC option

Max. speed
400 r/min

Max. power
70 kW
93.9 Hp

Max. torque
31977 N·m
23599.0 ft-lbs

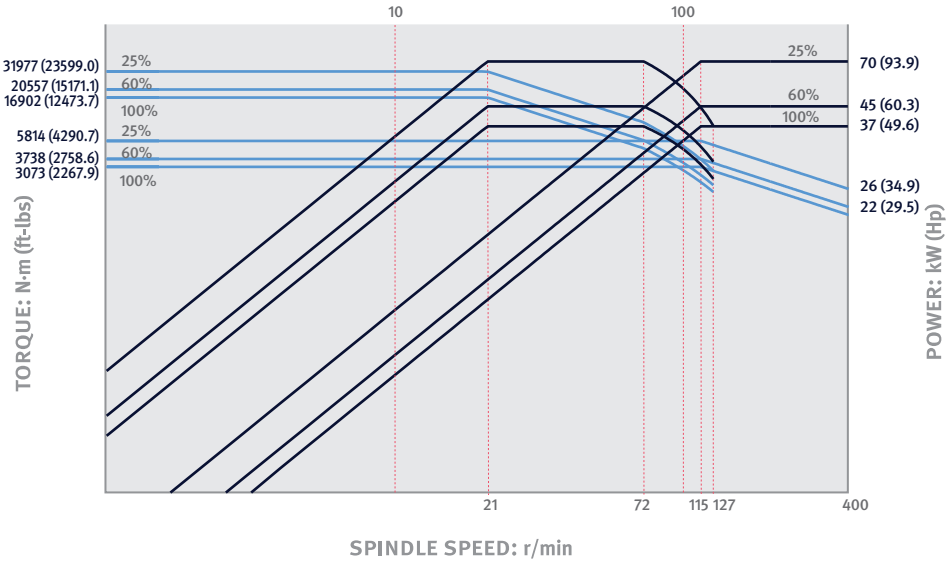

PUMA VTR1216/M/F option
PUMA VTR1216FM/FC option

Max. speed
400 r/min

Max. power
75 kW
100.6 Hp

Max. torque
31147 N·m
22986.5 ft-lbs

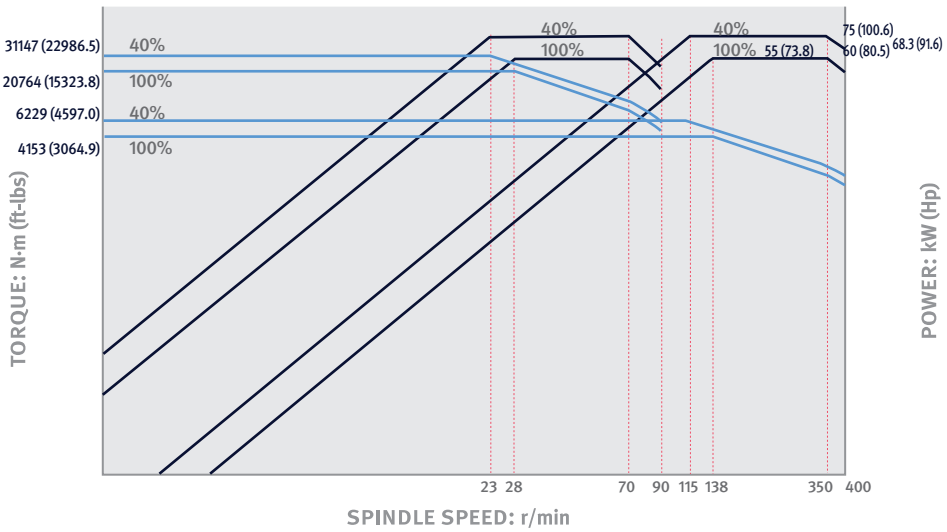

POWER | TORQUE

Main Spindle

PUMA VTR1620/M

Max. speed
300 r/min

Max. power
45 kW
60.3 Hp

Max. torque
24668 N·m
18205.0 ft-lbs

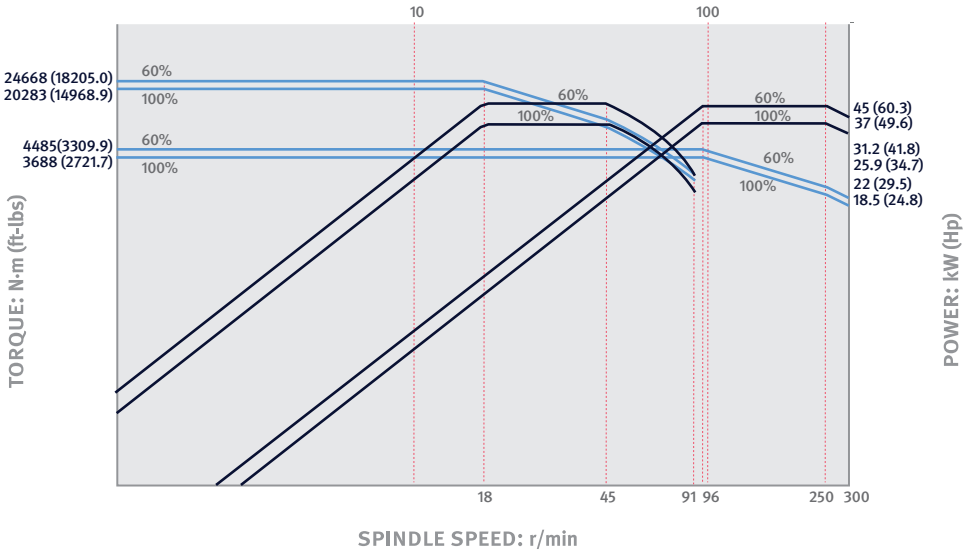

PUMA VTR1620/M option

Max. speed
300 r/min

Max. power
70 kW
93.9 Hp

Max. torque
38373 N·m
28319.3 ft-lbs

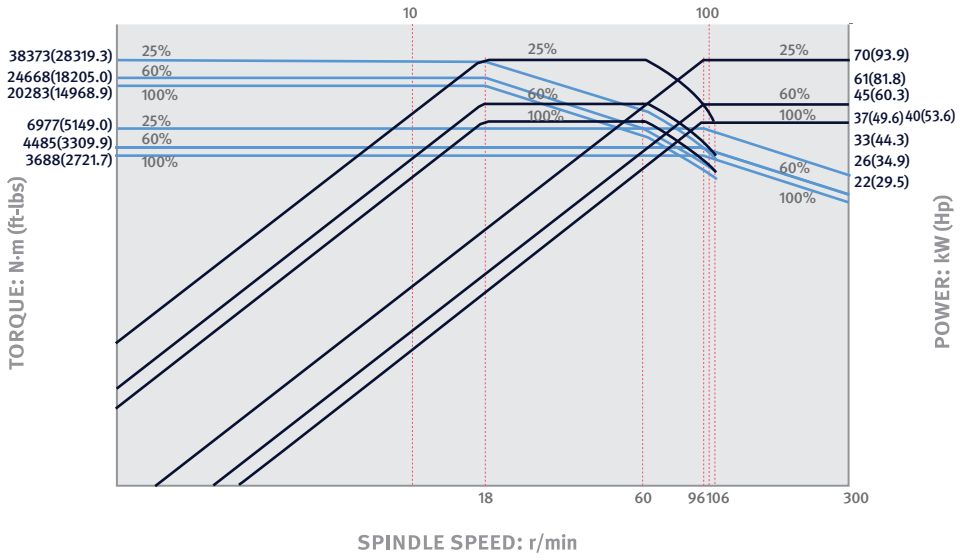

PUMA VTR1620M option

Max. speed
300 r/min

Max. power
75 kW
100.6 Hp

Max. torque
37376 N·m
27583.5 ft-lbs

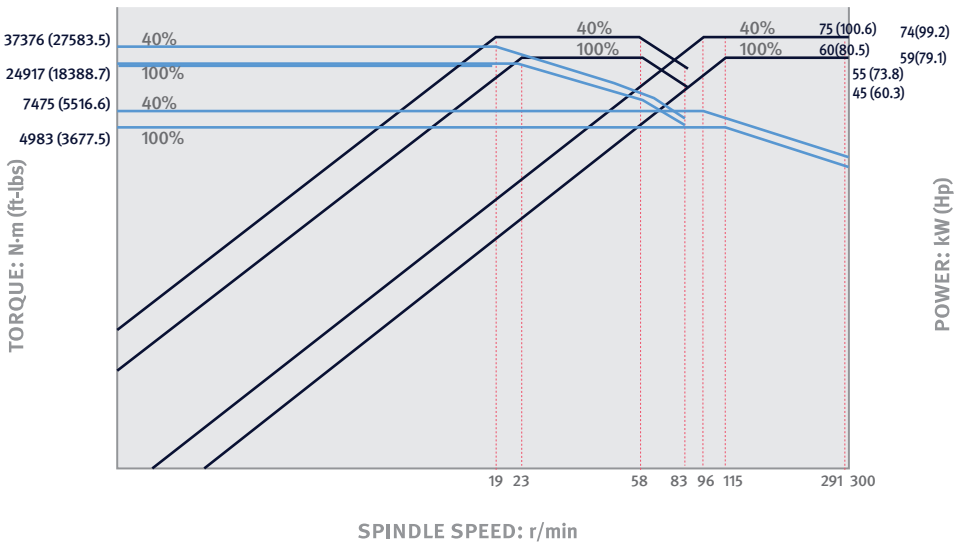

EXTERNAL DIMENSIONS

PUMA VTR 1012/1216/1620 series

Unit : mm (inch)

TOP

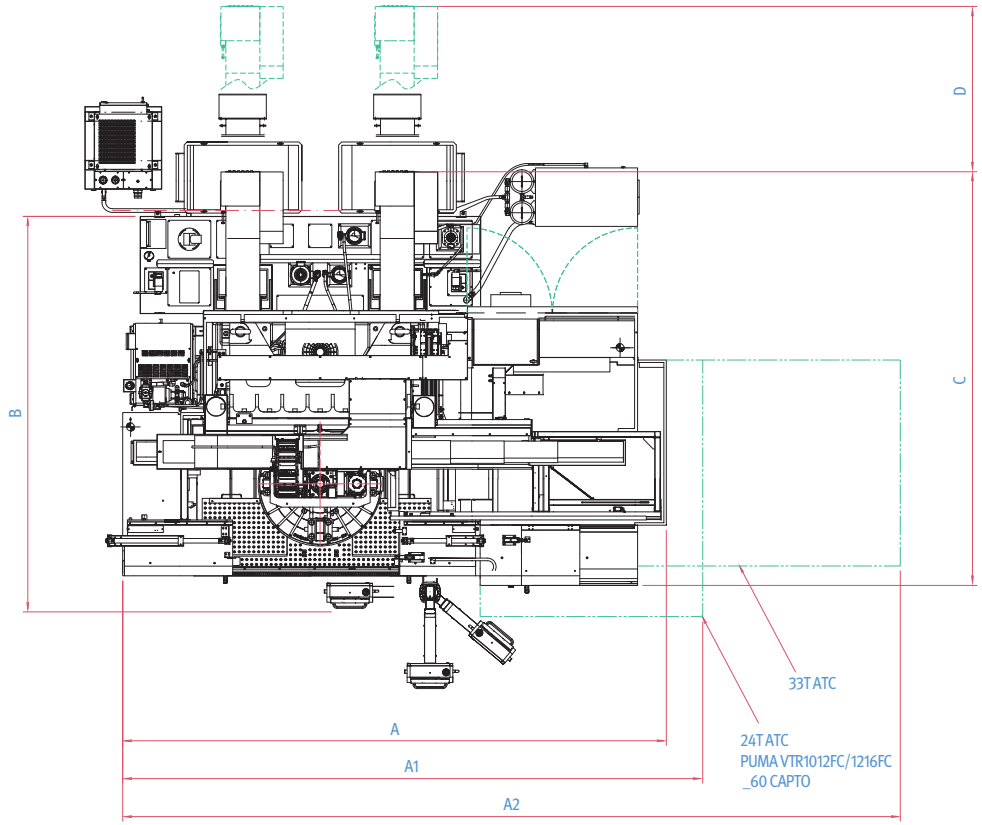

FRONT

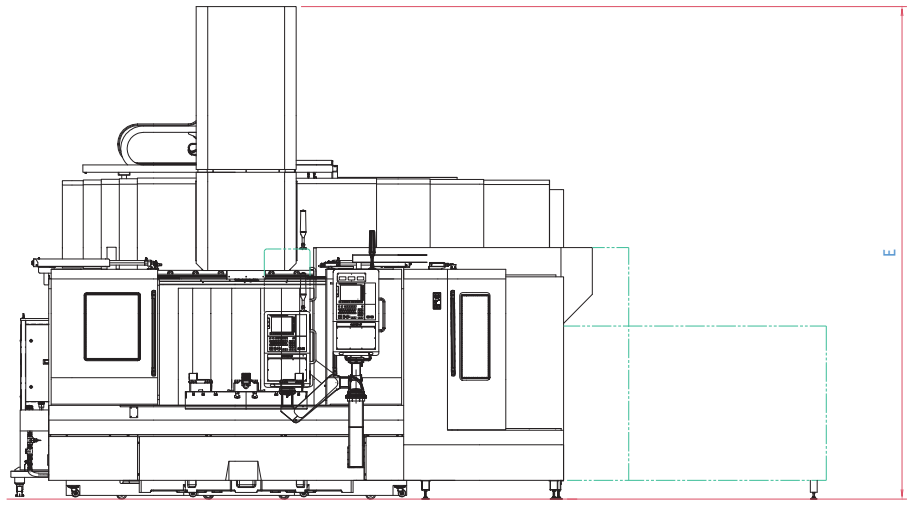

※ Please comply with our company's installation guideline, such as ground condition and anchoring, in order to achieve the maximum precision and performance of the machine.

Description	A	A1 (24ATC)	A2 (33ATC)	B	C	D	E
PUMA VTR1012F	4970 (195.7)	5545 (218.3)	-	3870 (152.4)	4128 (162.5)	1700 (66.9)	4768 (187.7)
PUMA VTR1012FC	4970 (195.7)	5545 (218.3) (60T Capto)	-	3987 (157.0)	4128 (162.5)	1700 (66.9)	4768 (187.7)
PUMA VTR1216F / FM	5590 (220.1)	5965 (219.1)	7995 (314.8)	4066 (160.1)	4225 (166.3)	1700 (66.9)	5065 (199.4)
PUMA VTR1216FC	5590 (220.1)	5965 (219.1) (60T Capto)	-	4115 (162.0)	4225 (166.3)	1700 (66.9)	5065 (199.4)
PUMA VTR1216 / M	5590 (220.1)	5965 (219.1)	7995 (314.8)	4066 (160.1)	4225 (166.3)	1700 (66.9)	5610 (220.9)
PUMA VTR1620 / M	6500 (255.9)	6955 (273.8)	9005 (354.5)	4757 (187.3)	5240 (206.3)	3000 (118.1)	6345 (249.8)

** Some peripheral equipment can be placed in other places*

EXTERNAL DIMENSIONS

PUMA VTR 2025/M

Unit : mm (inch)

TOP

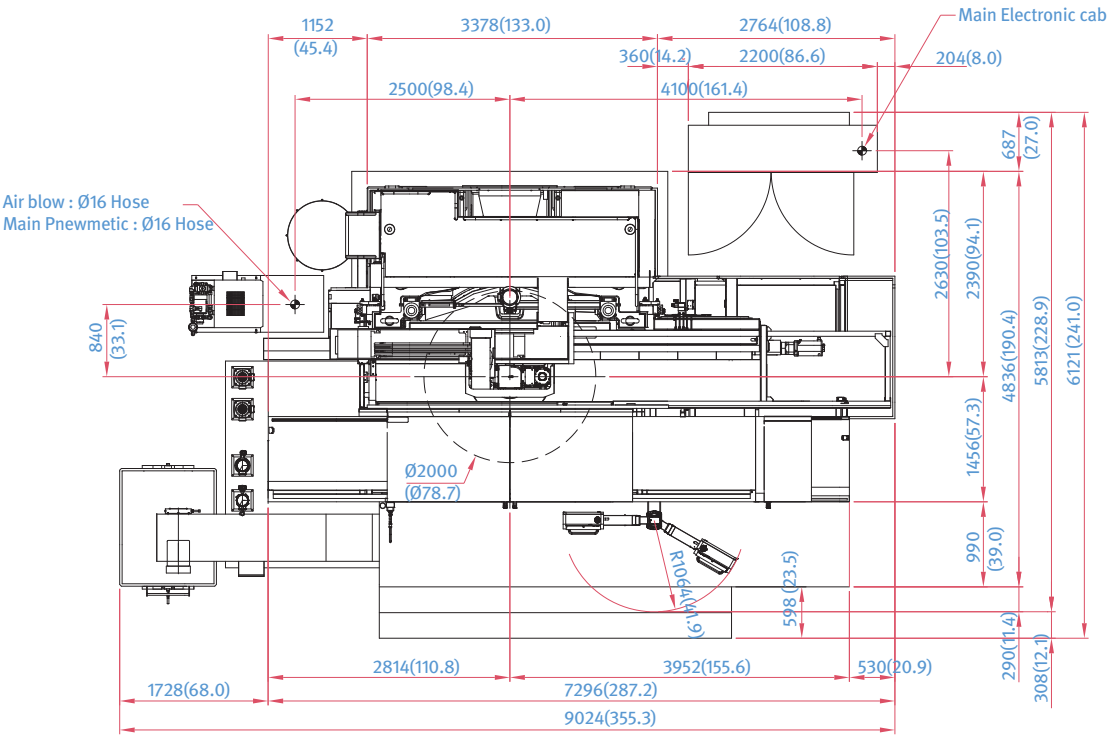

FRONT

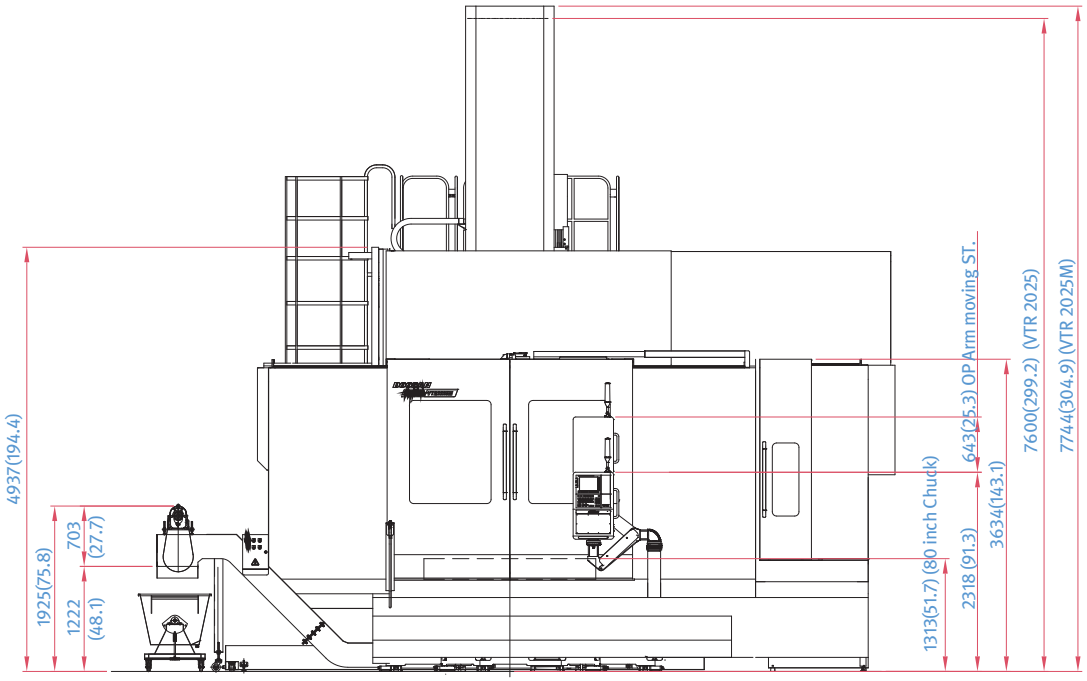

** Some peripheral equipment can be placed in other places*

TOOLING SYSTEM

Turning

Unit : mm (inch)

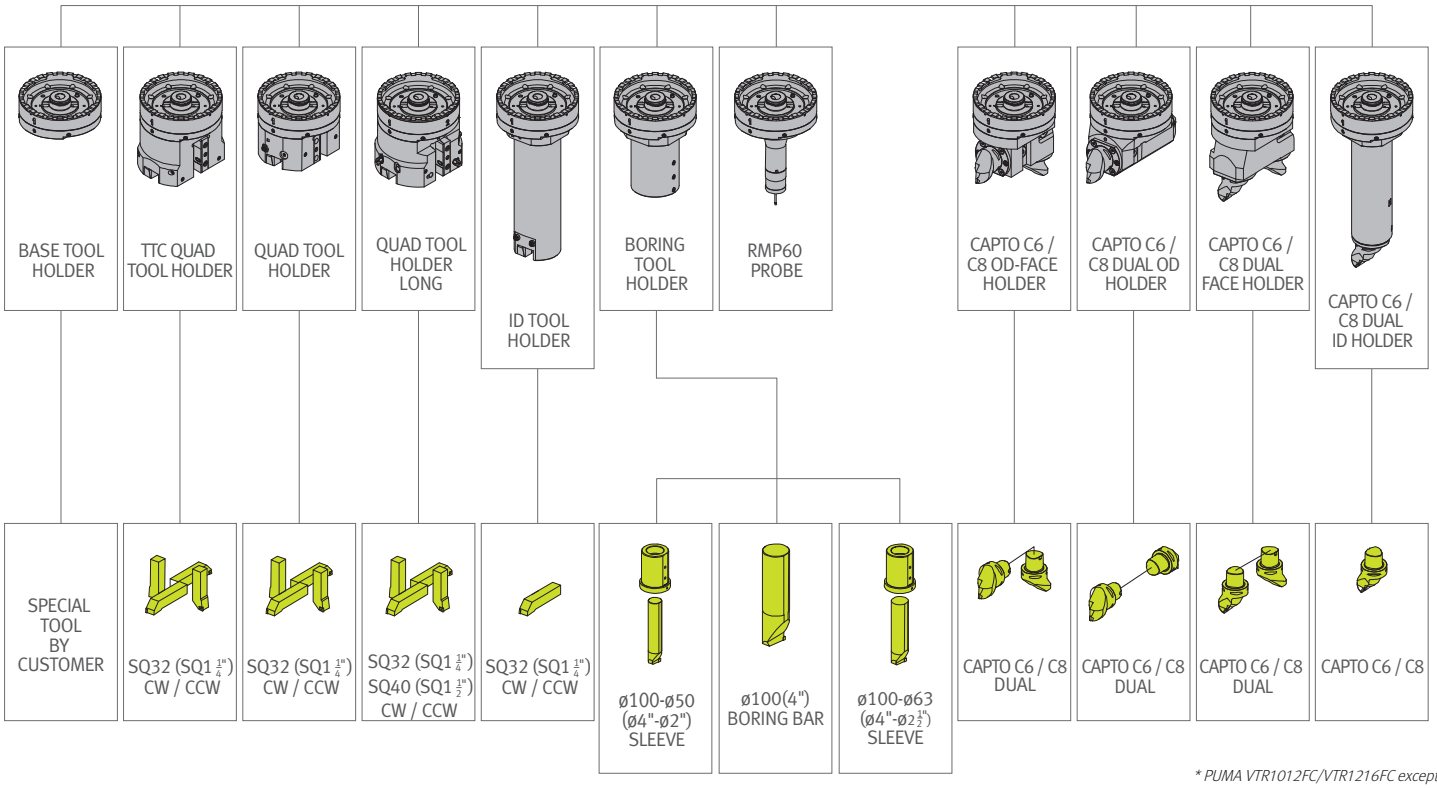

** PUMA VTR1012FC/VTR1216FC except*

Turning

PUMA VTR1012FC, VTR1216FC

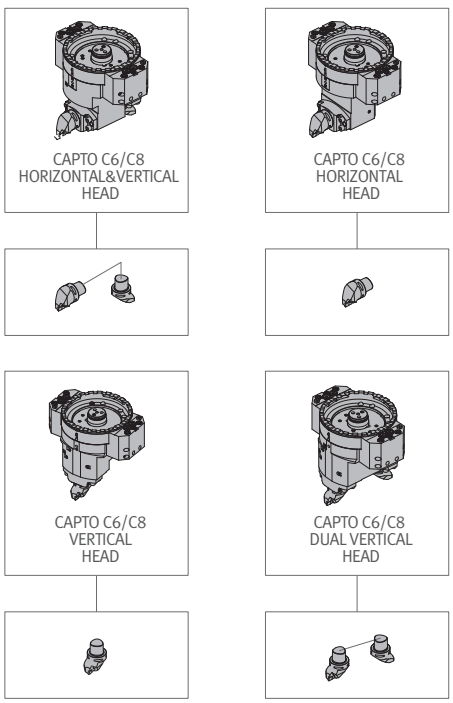

** HORIZONTAL&VERTICAL HEAD 1set : Standard*

Milling

PUMA VTR1216M/FM, VTR1620M, VTR2025M

Unit : mm (inch)

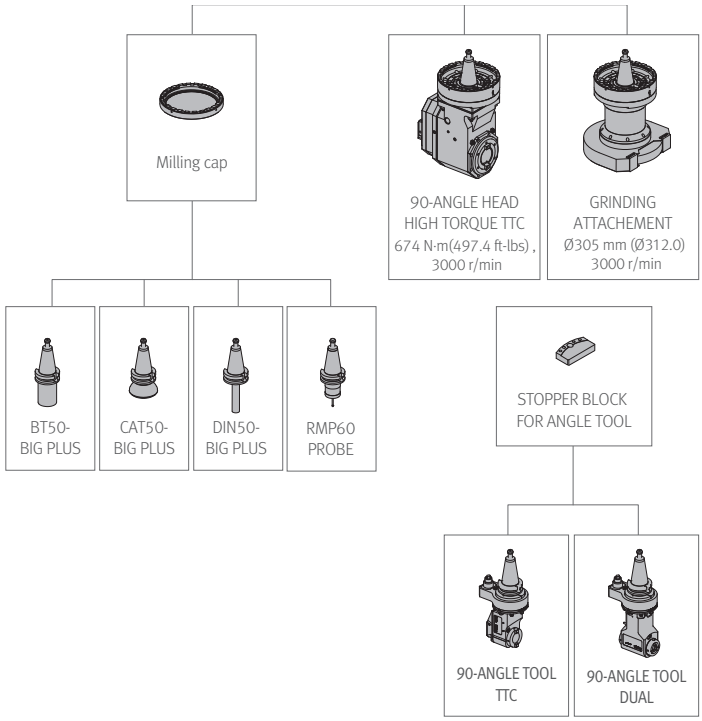

TOOLING ATTACHMENT

PUMA VTR Series

Unit : mm (inch)

BASE TOOL HOLDER option

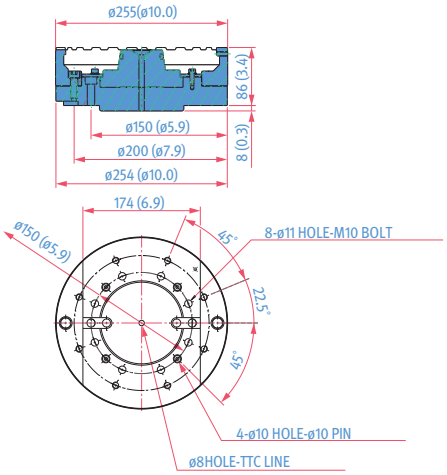

BORING TOOL HOLDER option

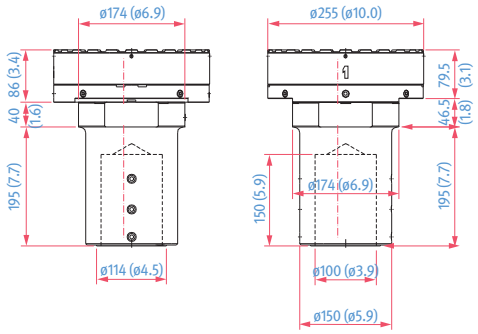

QUAD TOOL HOLDER_LONG option

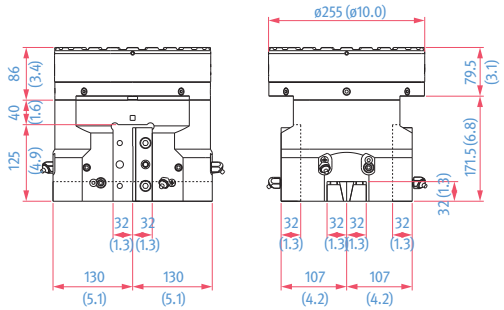

RMP60 PROBE option

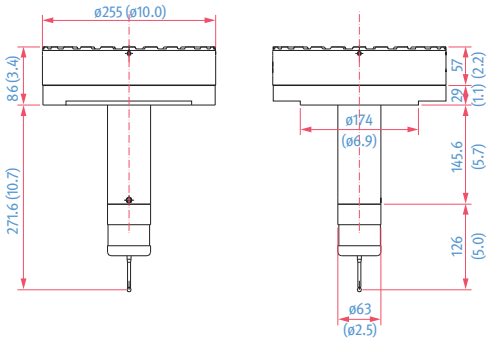

QUAD TOOL HOLDER option

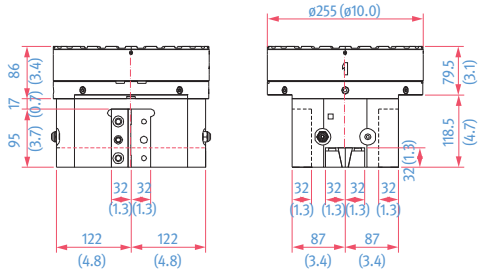

ID TOOL HOLDER option

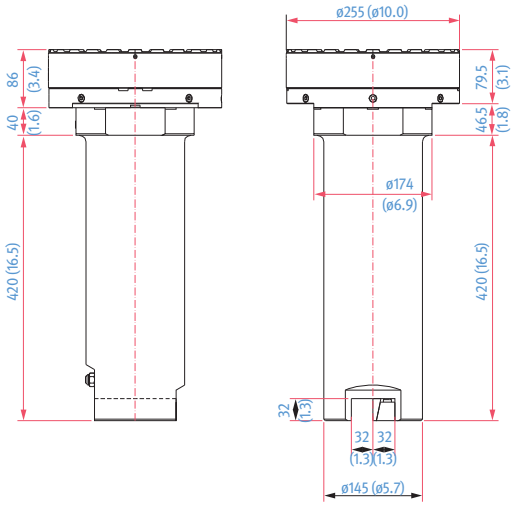

QUAD TOOL HOLDER(TTC) option

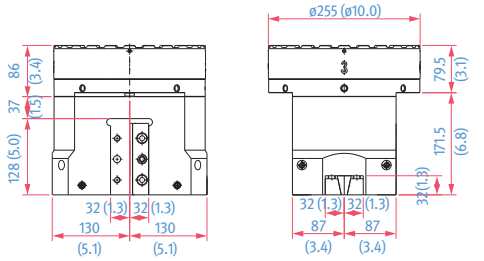

[caution] **Normal Type**

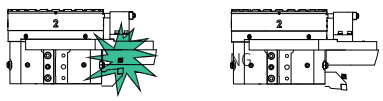

Long Type

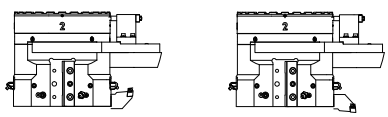

TOOLING ATTACHMENT

PUMA VTR Series

Unit : mm (inch)

CAPTO-C6 OD-FACE HOLDER option

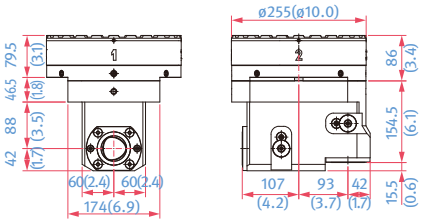

CAPTO-C6 DUAL FACE HOLDER option

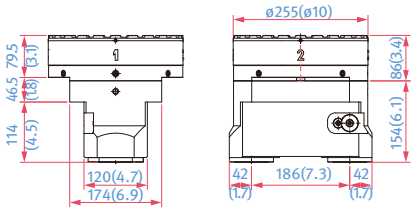

CAPTO-C6 DUAL OD HOLDER option

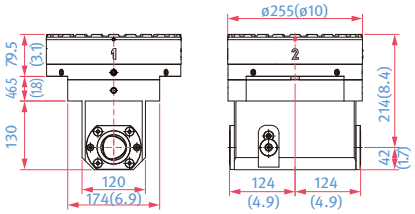

CAPTO-C6 ID HOLDER option

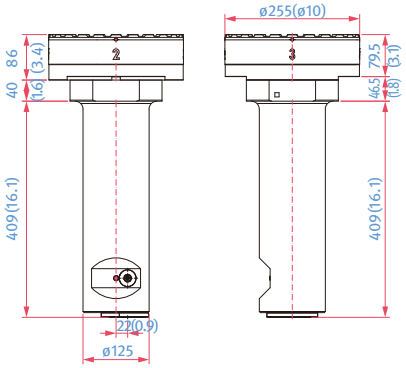

CAPTO-C8 OD-FACE HOLDER option

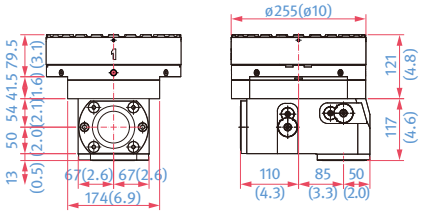

CAPTO-C8 DUAL FACE HOLDER option

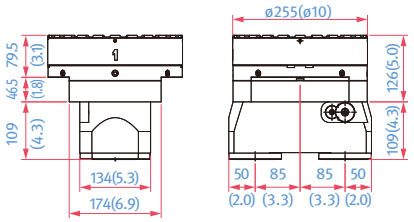

CAPTO-C8 DUAL OD HOLDER option

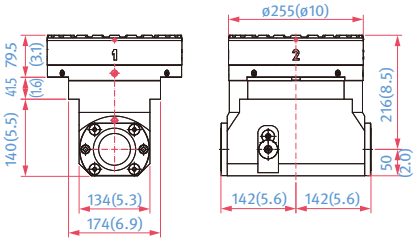

CAPTO-C8 ID HOLDER option

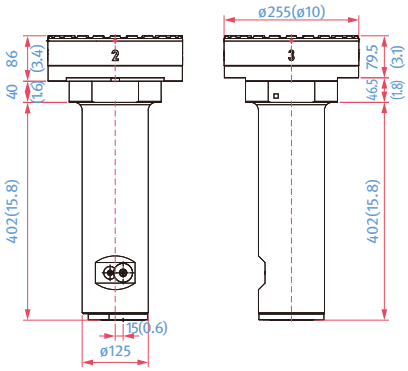

TOOLING ATTACHMENT

PUMA VTR Series

Unit : mm (inch)

90-ANGLE TOOL TTC option

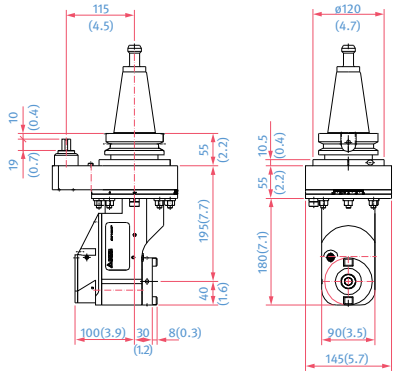

90-ANGLE TOOL DUAL option

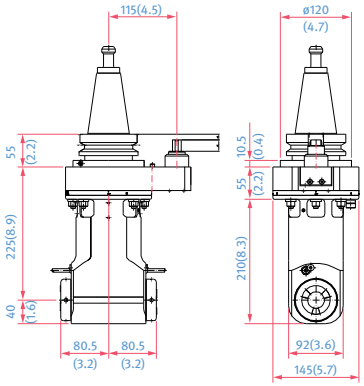

90-ANGLE HIGH TORQUE TTC option

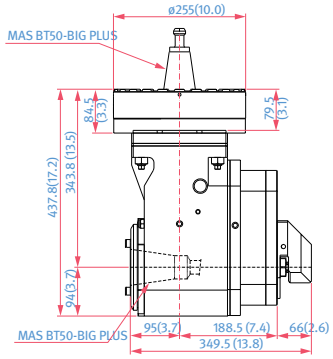

GRINDING ATTACHMENT option

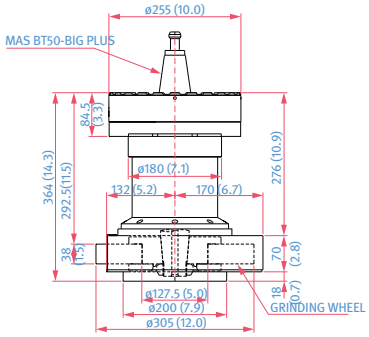

PUMA VTR1012FC/1216FC

90-ANGLE TOOL TTC option

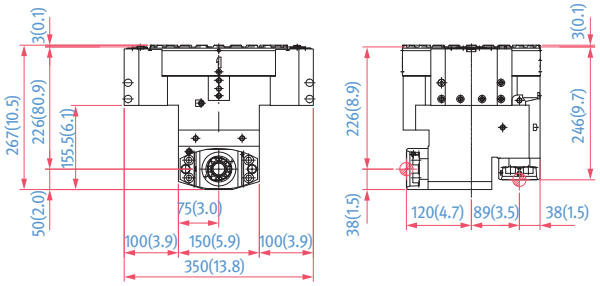

90-ANGLE TOOL DUAL option

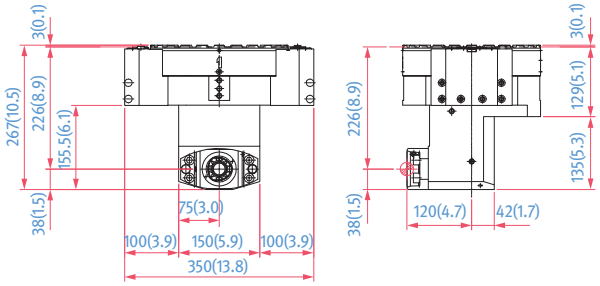

CAPTO C6 VERTICAL HOLDER option

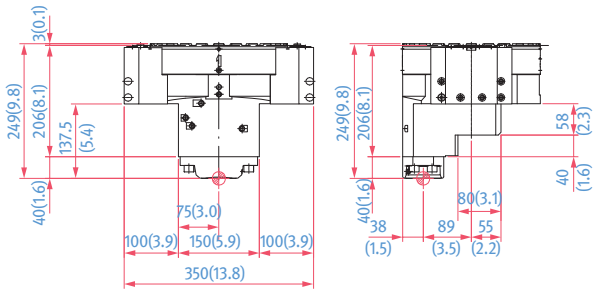

CAPTO C6 DUAL VERTICAL HOLDER option

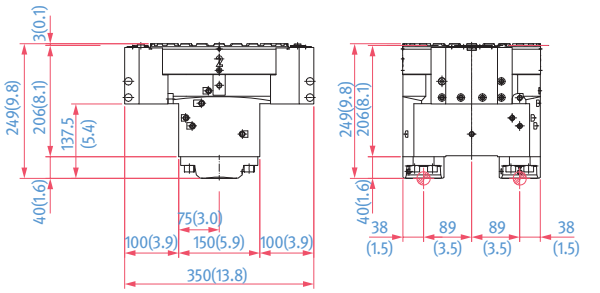

TOOLING ATTACHMENT | WORKING RANGE DIAGRAM

PUMA VTR1012FC/1216FC

Unit : mm (inch)

CAPTO C8 HORIZONTAL VERTICAL HOLDER option

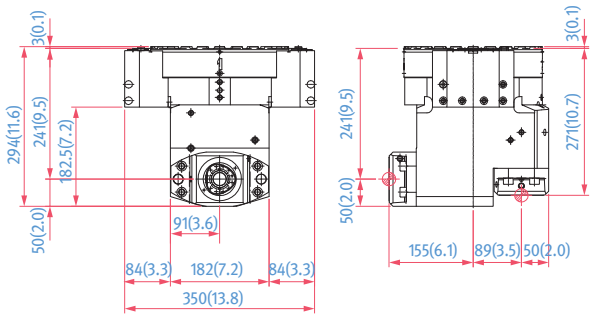

CAPTO C8 HORIZONTAL HOLDER option

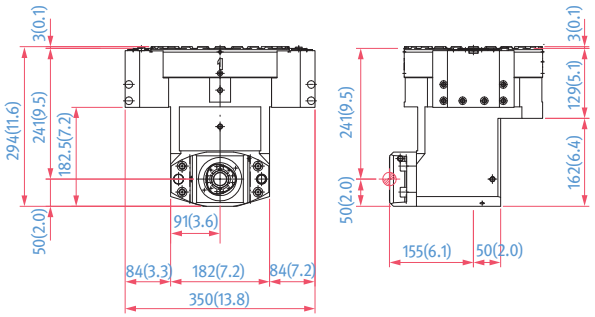

CAPTO C8 VERTICAL HOLDER option

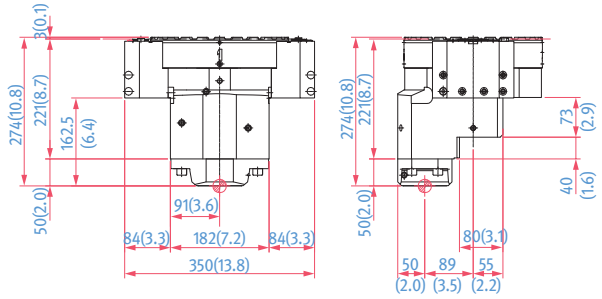

CAPTO C8 DUAL VERTICAL HOLDER option

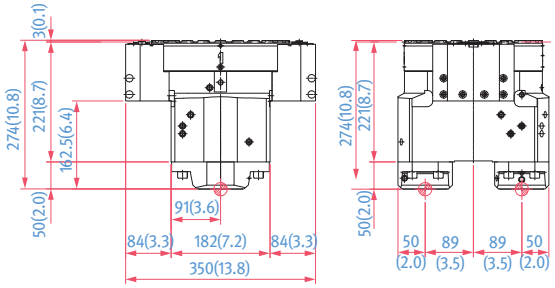

PUMA VTR1012F

CAPTO C6_HORIZONTAL

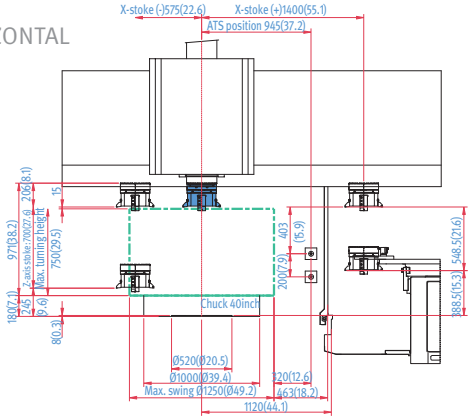

CAPTO C6_VERTICAL

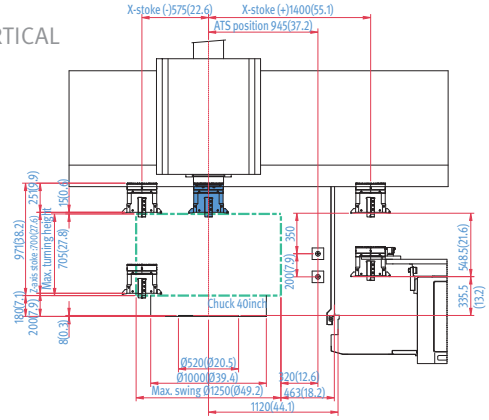

CAPTO C8_HORIZONTAL

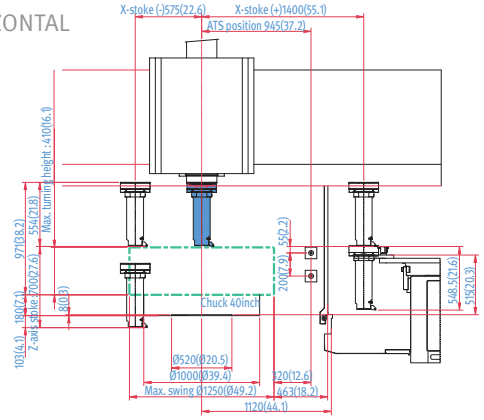

CAPTO C8_VERTICAL

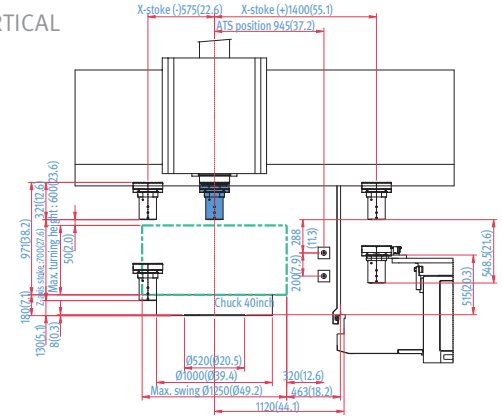

WORKING RANGE DIAGRAM

PUMA VTR1012FC

Unit : mm (inch)

CAPTO C6_HORIZONTAL

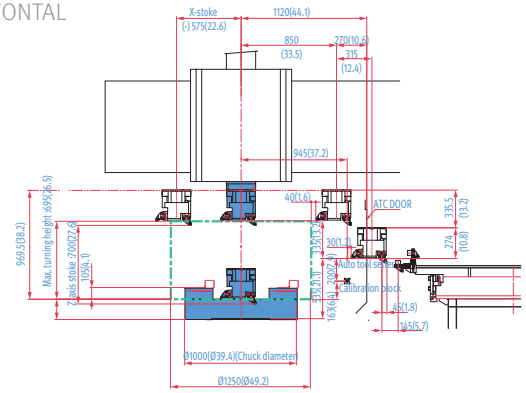

CAPTO C6_VERTICAL

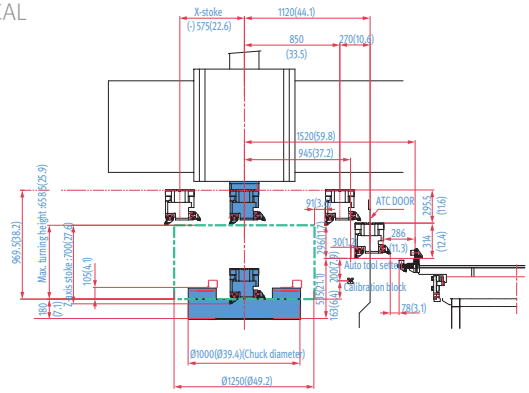

CAPTO C8_HORIZONTAL

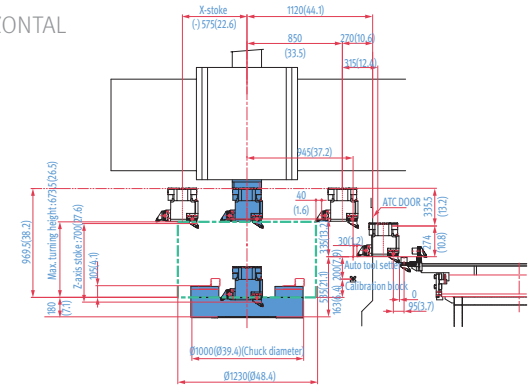

CAPTO C8_VERTICAL

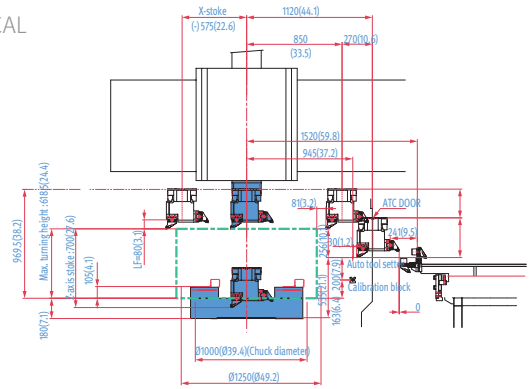

PUMA VTR1216FC

CAPTO C6_HORIZONTAL

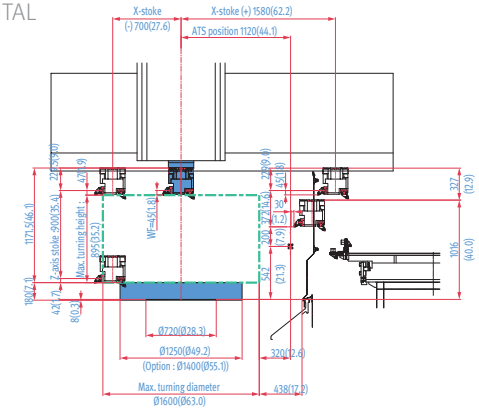

CAPTO C6_VERTICAL

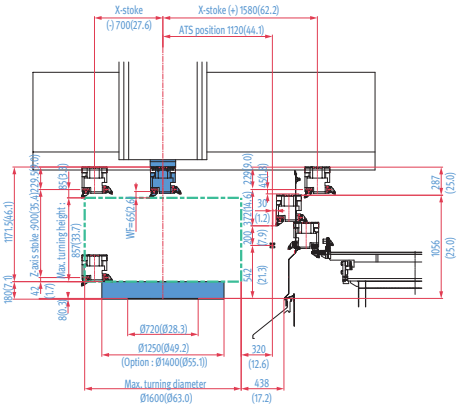

CAPTO C8_HORIZONTAL

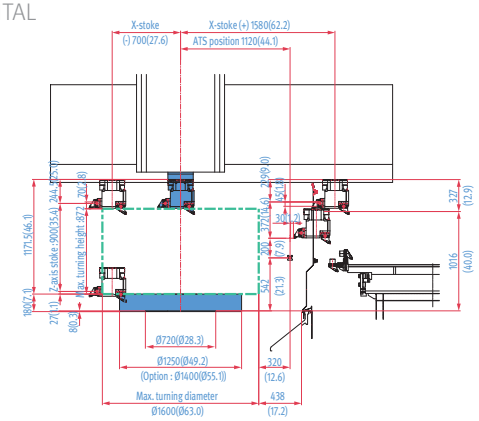

CAPTO C8_VERTICAL

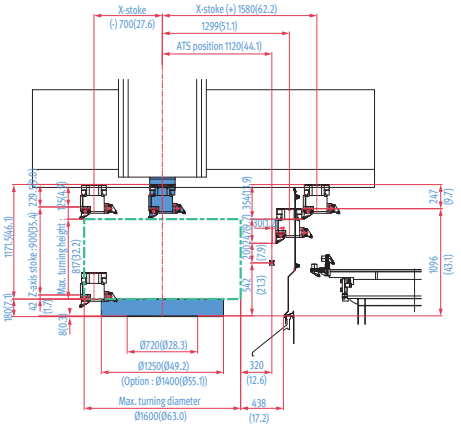

WORKING RANGE DIAGRAM

PUMA VTR1216F/FM

Unit : mm (inch)

MILLING TOOL HOLDER

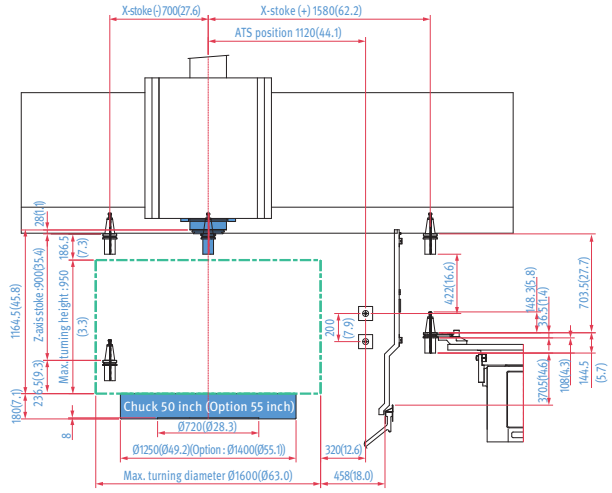

90D ANGLE HEAD

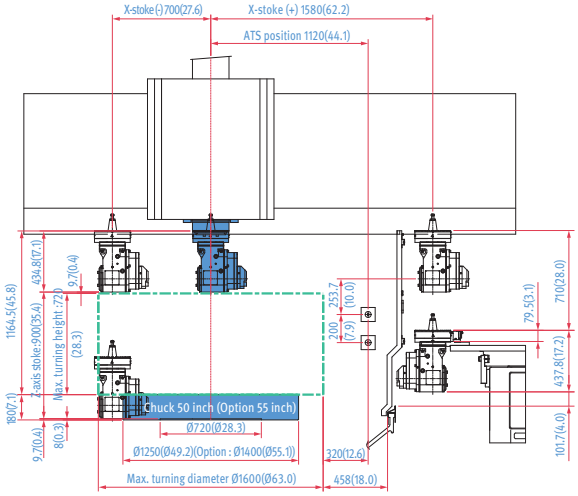

90D ANGLE HEAD_BENZ

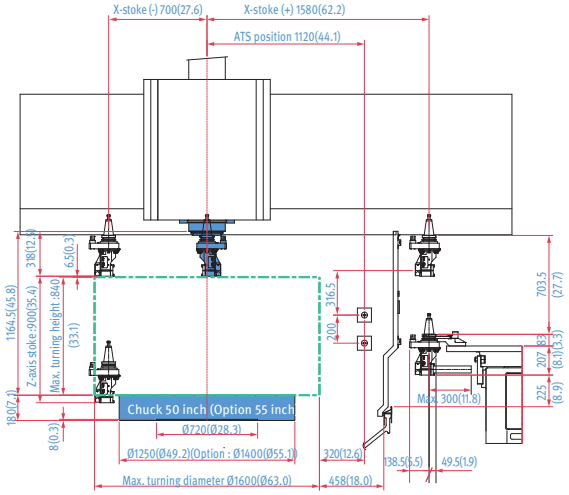

GRINDING ATTACHMENT

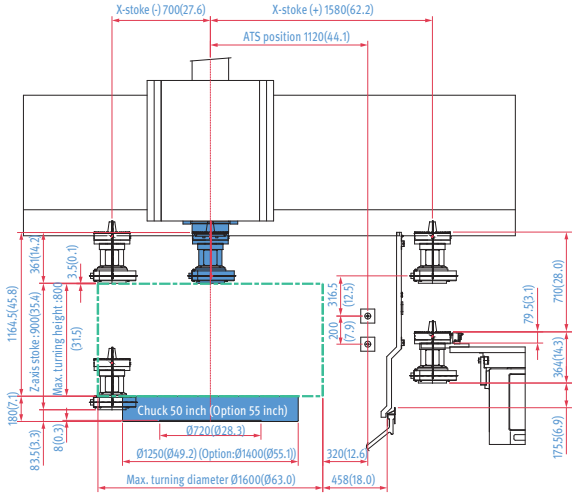

CAPTO FACE O.D HOLDER_C6

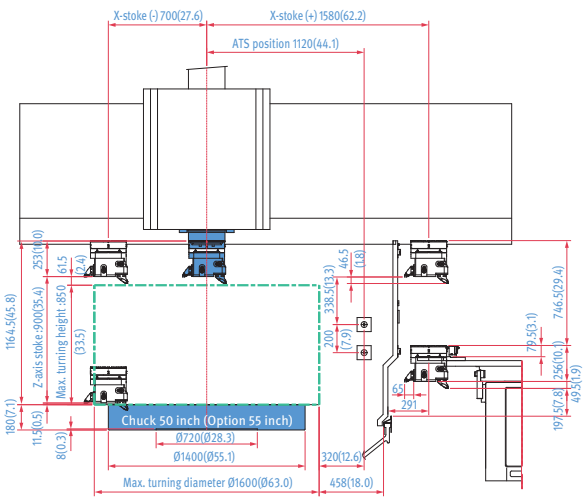

CAPTO I.D HOLDER_C6

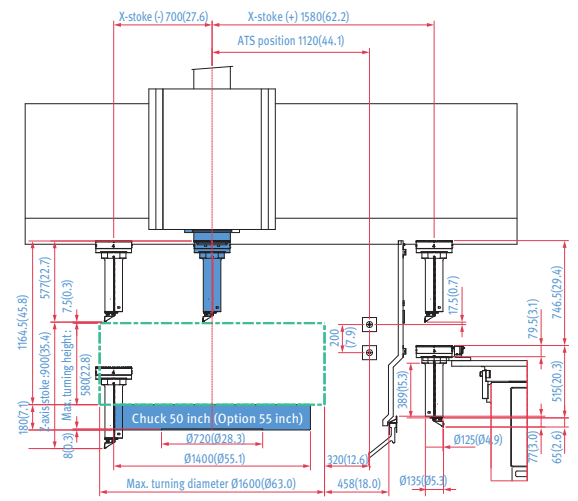

WORKING RANGE DIAGRAM

PUMA VTR1216F/FM

CAPTO FACE O.D HOLDER_C8

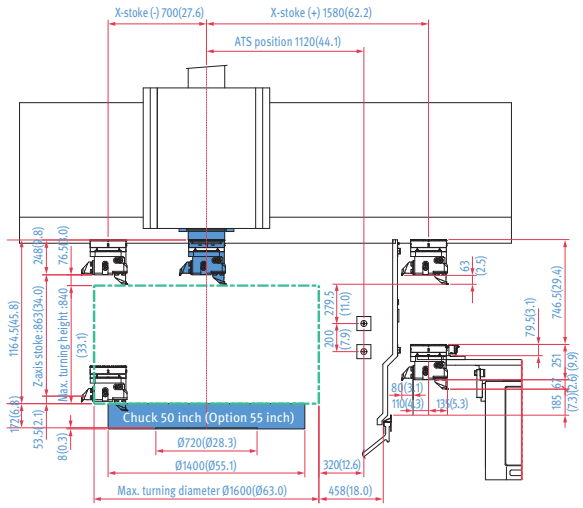

CAPTO I.D HOLDER_C8

Unit : mm (inch)

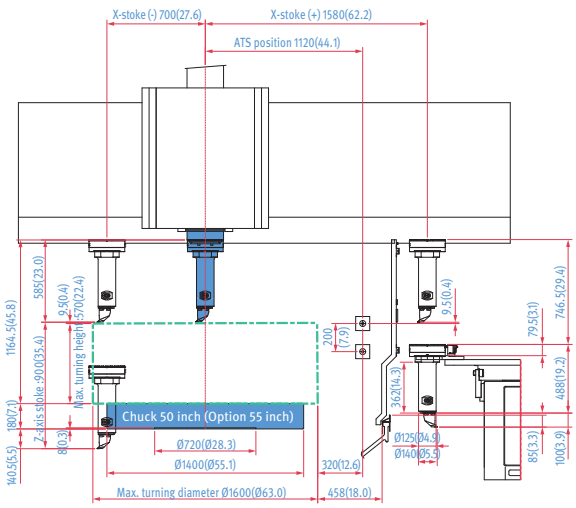

QUAD TOOL HOLDER

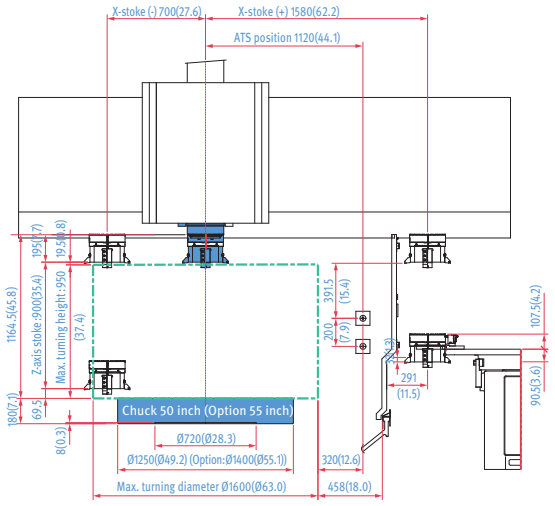

QUAD TOOL HOLDER_LONG

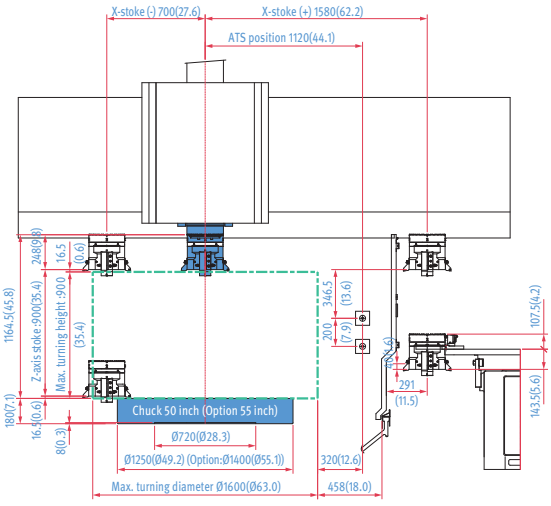

ID HOLDER

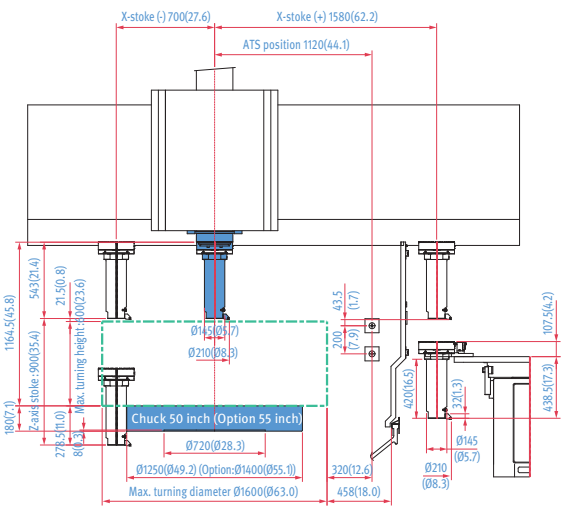

BORING HOLDER

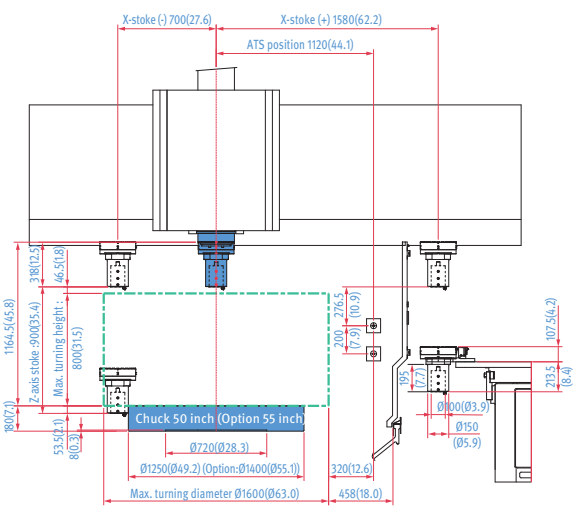

WORKING RANGE DIAGRAM

PUMA VTR1216/1216M

Unit : mm (inch)

MILLING TOOL HOLDER

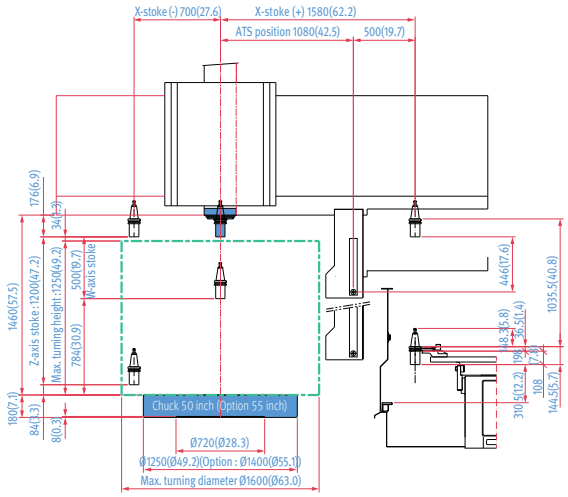

90D ANGLE HEAD

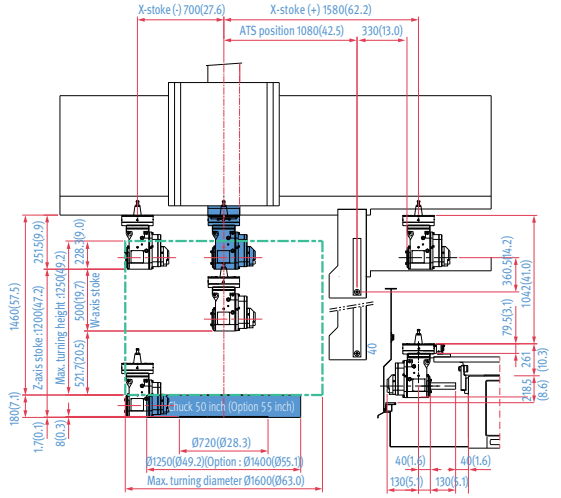

90D ANGLE HEAD_BENZ

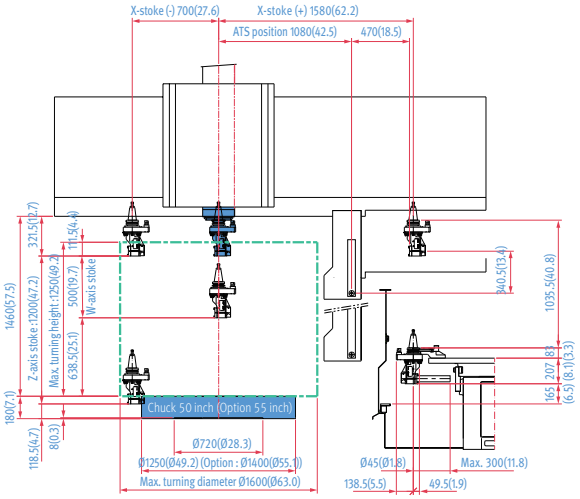

GRINDING ATTACHMENT

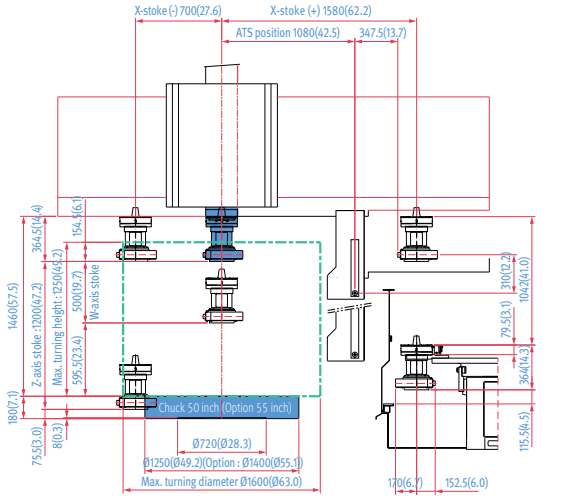

CAPTO FACE O.D HOLDER_C6

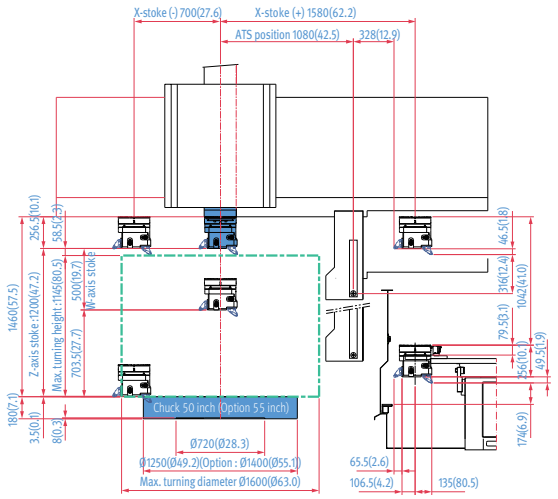

CAPTO I.D HOLDER_C6

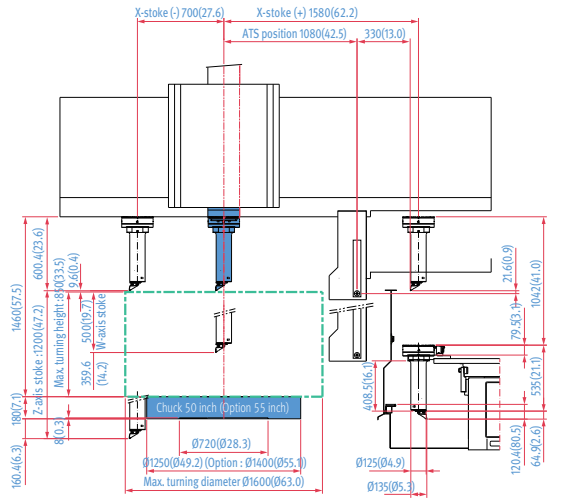

WORKING RANGE DIAGRAM

PUMA VTR1216/1216M

CAPTO FACE O.D HOLDER_C8

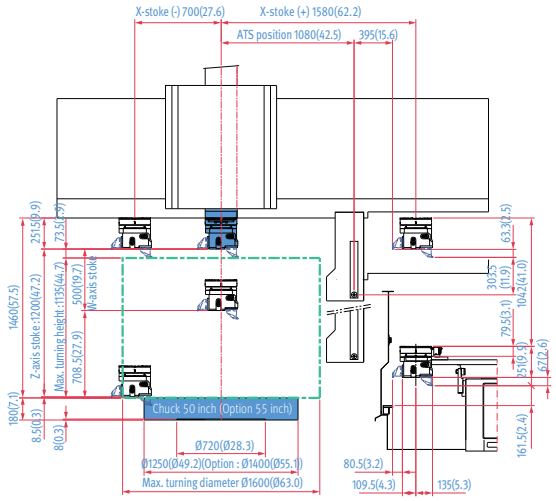

CAPTO I.D HOLDER_C8

Unit : mm (inch)

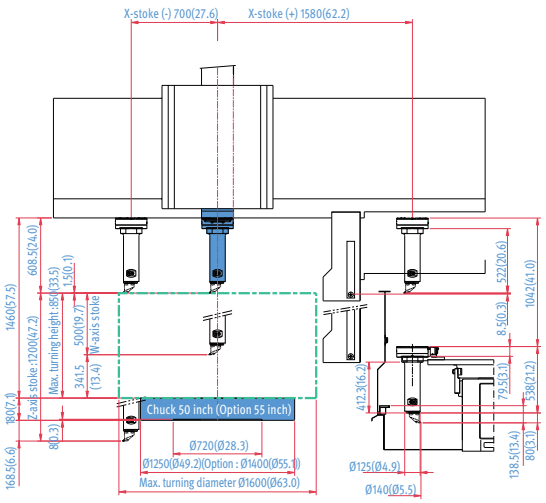

QUAD TOOL HOLDER

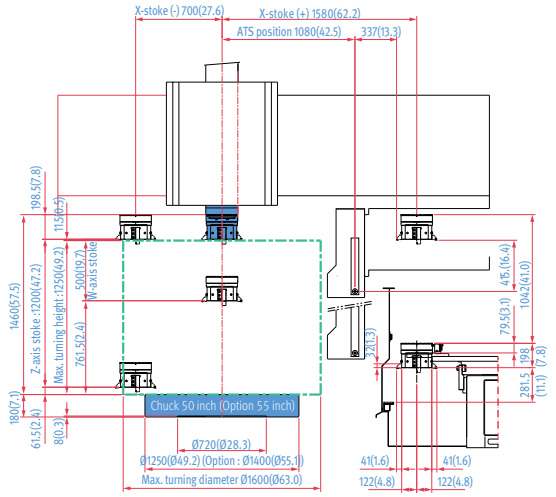

QUAD TOOL HOLDER_LONG

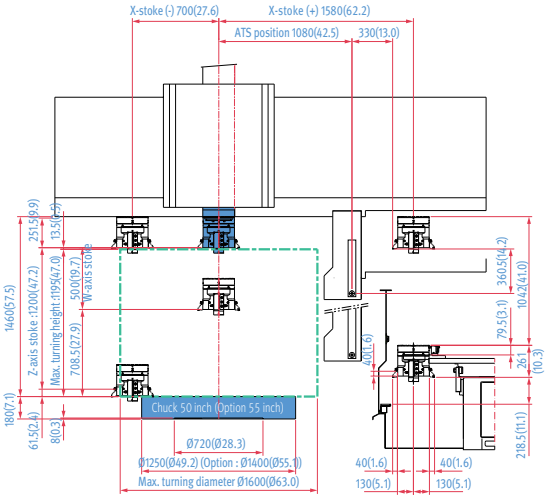

ID HOLDER

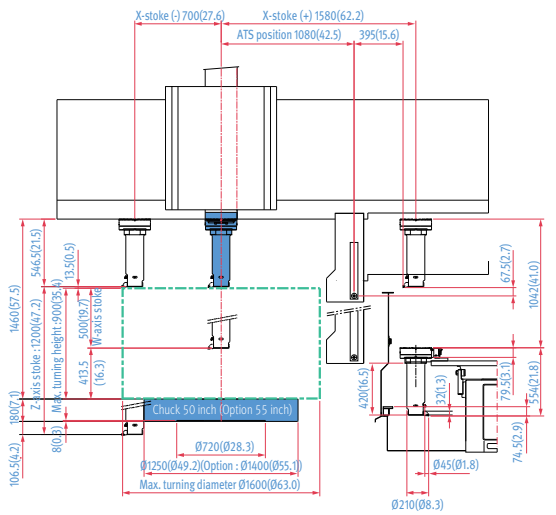

BORING HOLDER

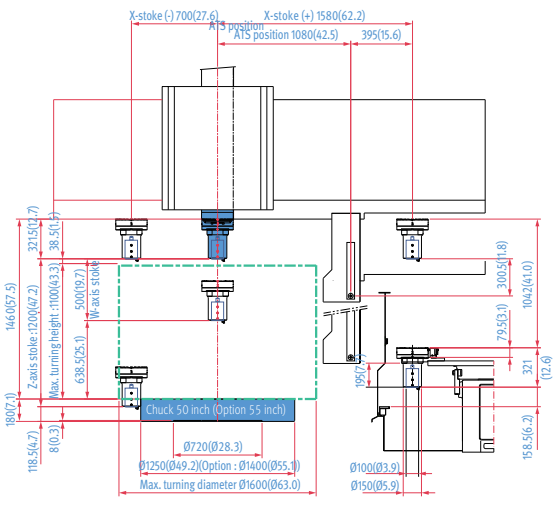

WORKING RANGE DIAGRAM

PUMA VTR1620/1620M

QUAD TOOL HOLDER

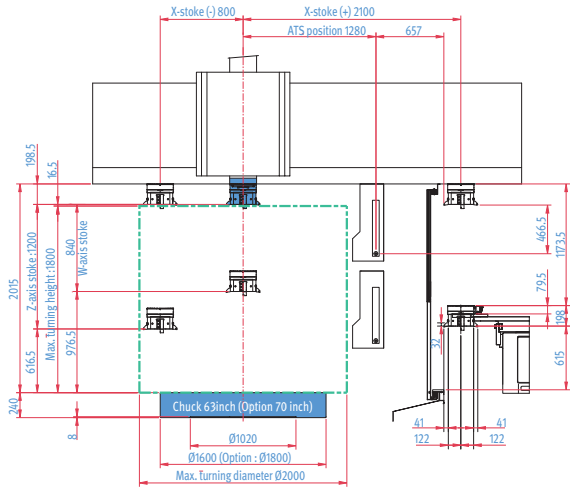

QUAD TOOL HOLDER_LONG

Unit : mm (inch)

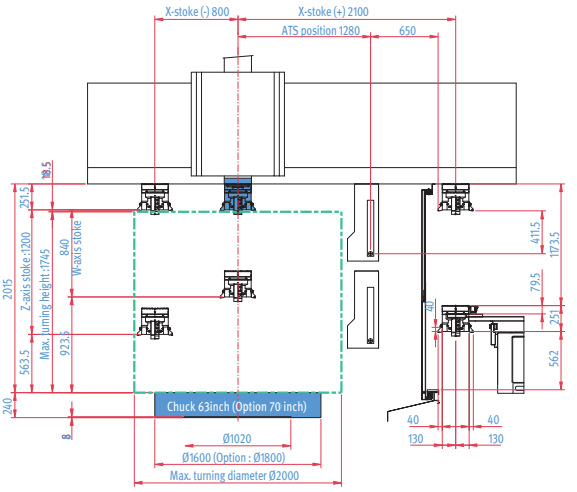

CAPTO FACE O.D HOLDER_C6

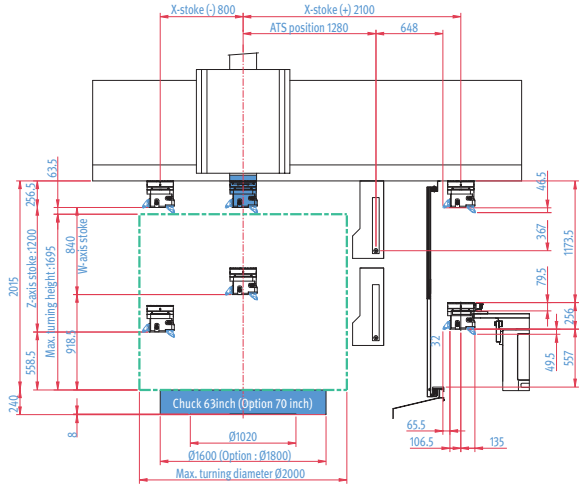

CAPTO I.D HOLDER_C6

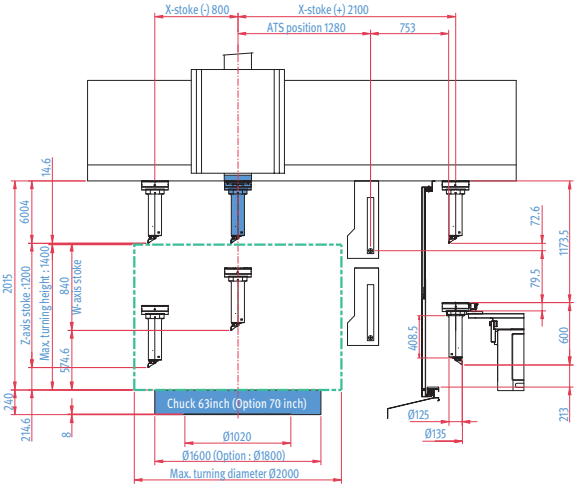

MILLING TOOL HOLDER

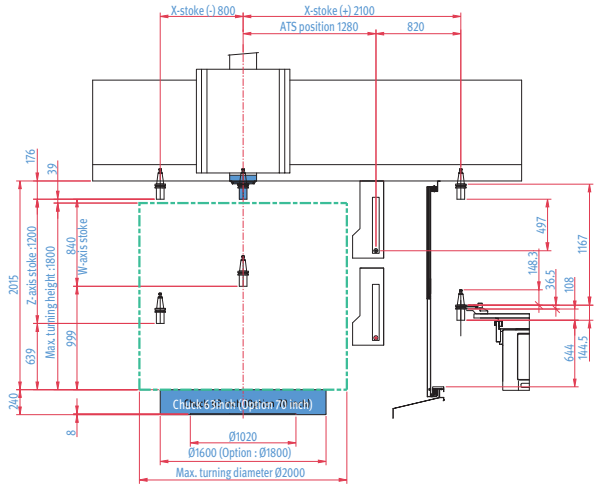

90D ANGLE HEAD

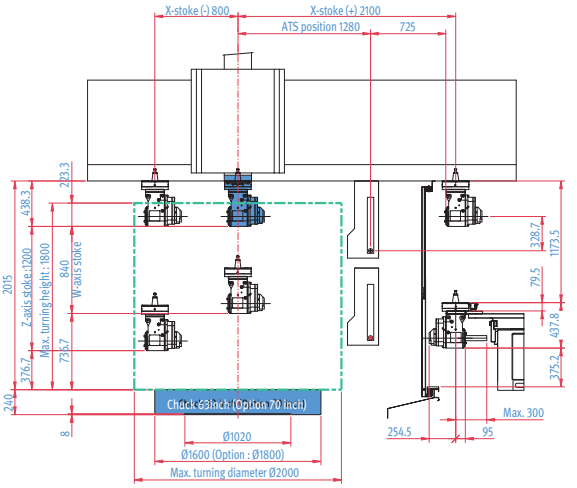

WORKING RANGE DIAGRAM

PUMA VTR1620/1620M

CAPTO I.D HOLDER

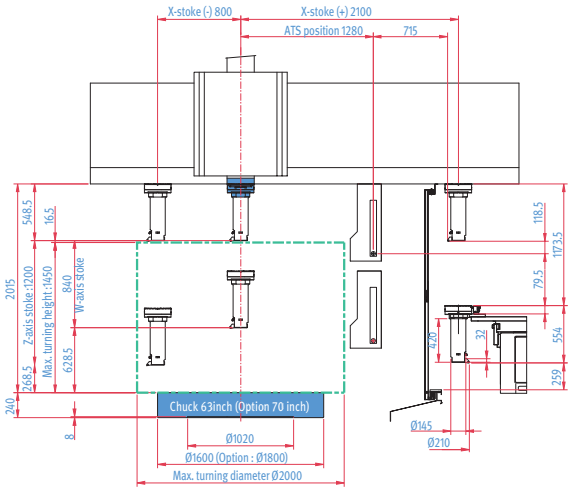

BORING HOLDER

Unit : mm (inch)

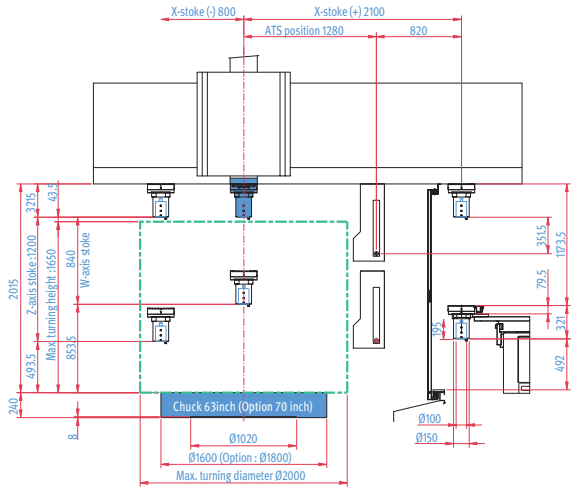

CAPTO FACE O.D HOLDER_C8

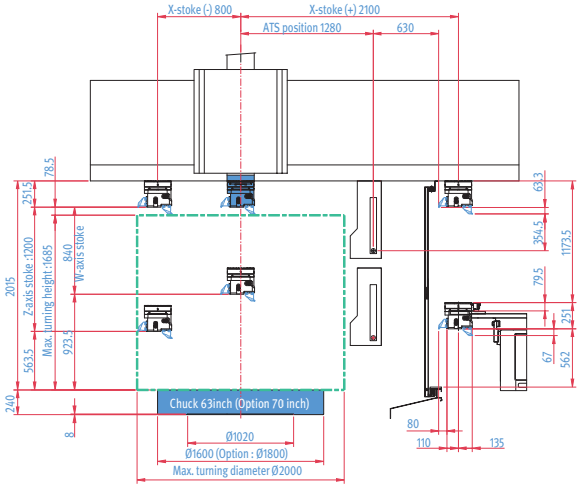

CAPTO I.D HOLDER_C8

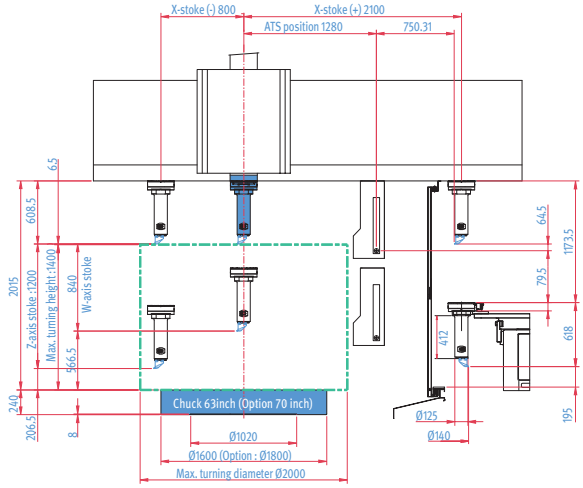

90D ANGLE HEAD_BENZ

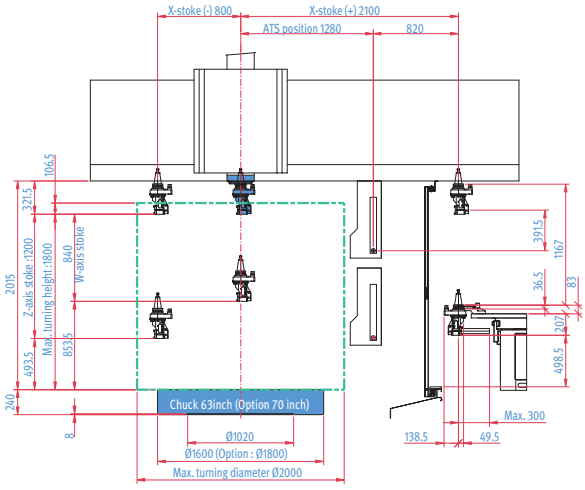

GRINDING HEAD

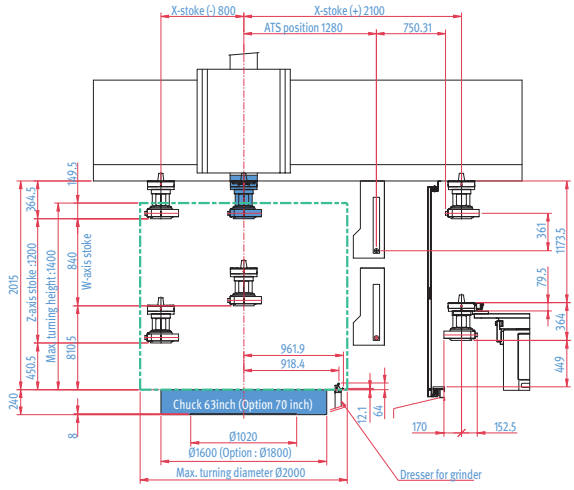

WORKING RANGE DIAGRAM

PUMA VTR2025/M

QUAD TOOL HOLDER

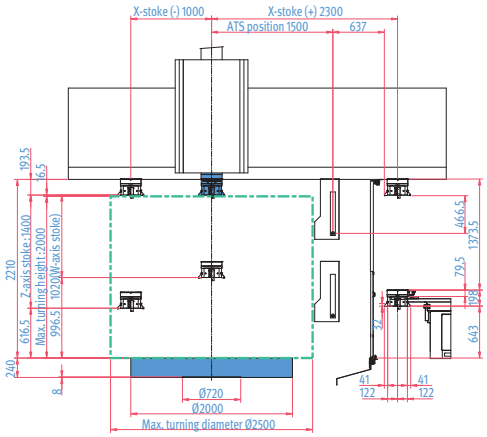

QUAD TOOL HOLDER_LONG

Unit : mm (inch)

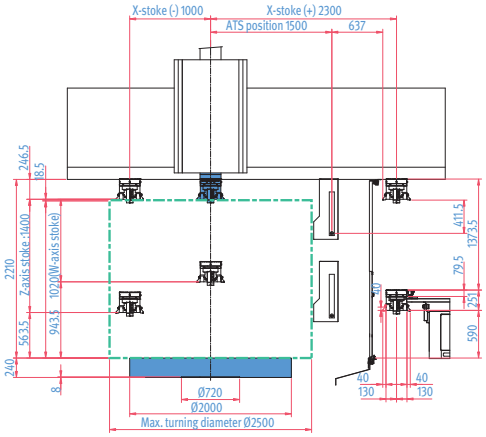

FACE O.D HOLDER_C6

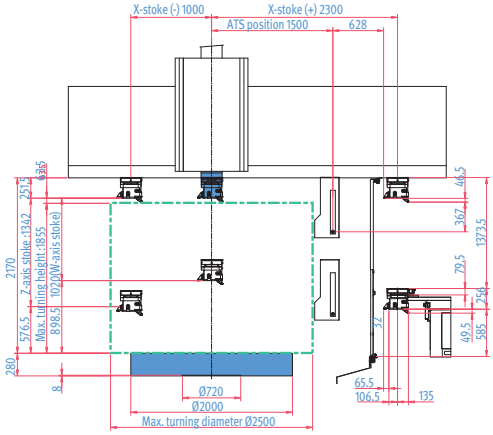

I.D HOLDER_C6

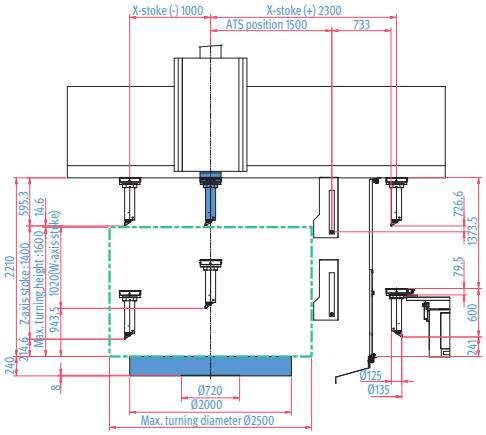

MILLING TOOL HOLDER

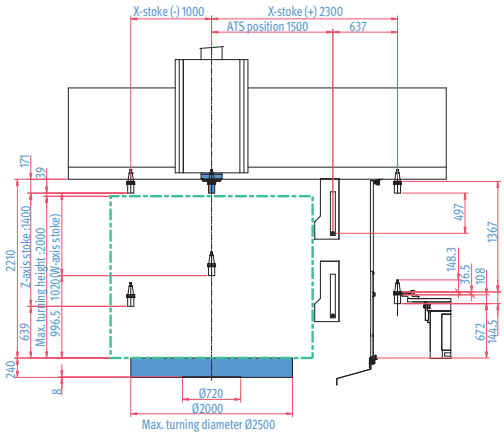

90D ANGLE HEAD

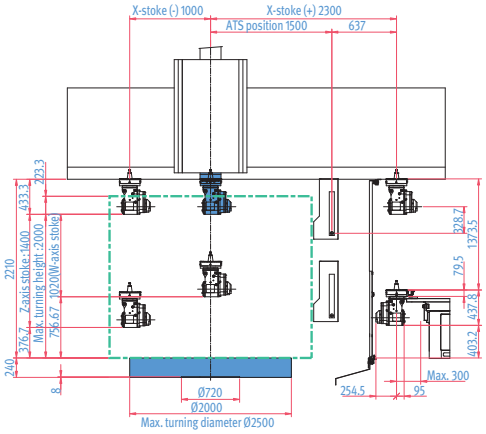

WORKING RANGE DIAGRAM

PUMA VTR2025/M

Unit : mm (inch)

I.D HOLDER

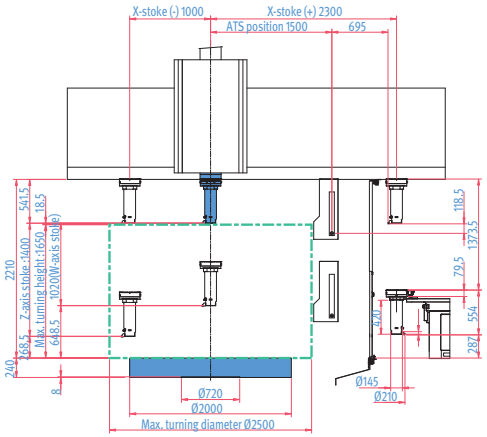

BORING HOLDER

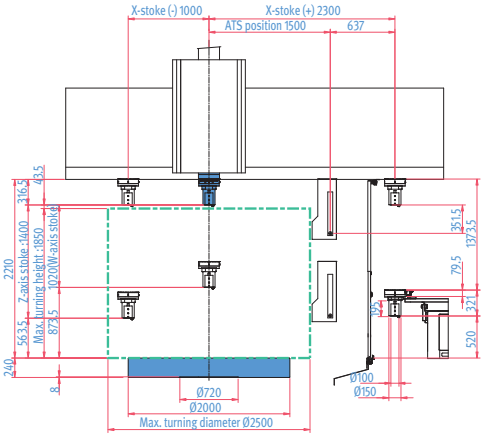

FACE O.D HOLDER_C8

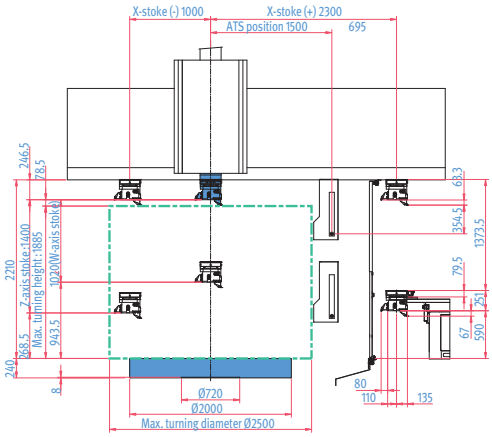

I.D HOLDER_C8

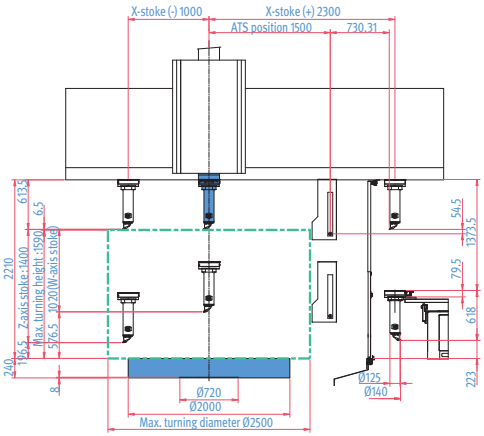

90D ANGLE HEAD_BENZ

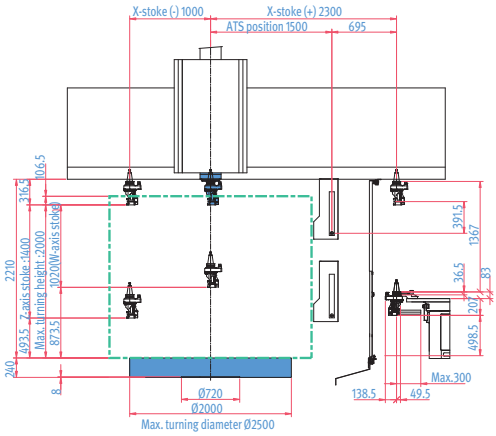

GRINDING HEAD

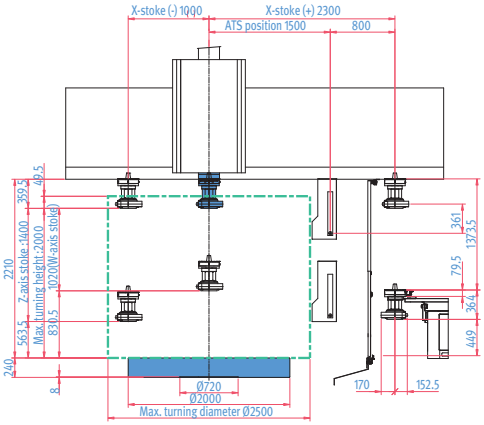

TOOL INTERFERENCE DIAGRAM

PUMA VTR1012F/1216/1216F (12-ATC)

Unit : mm (inch)

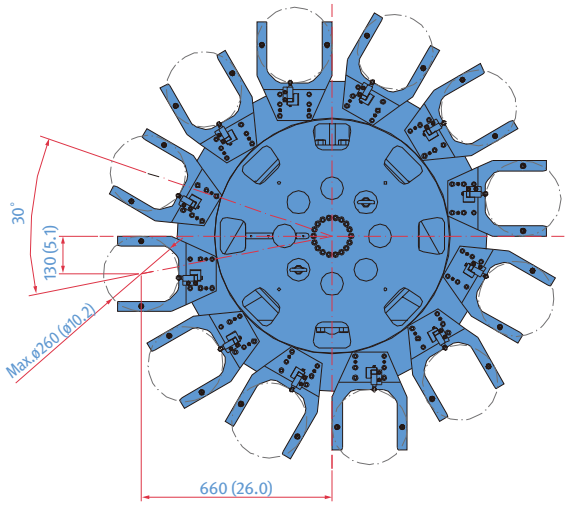

MAX. RAM TOOL SIZE-TURNING

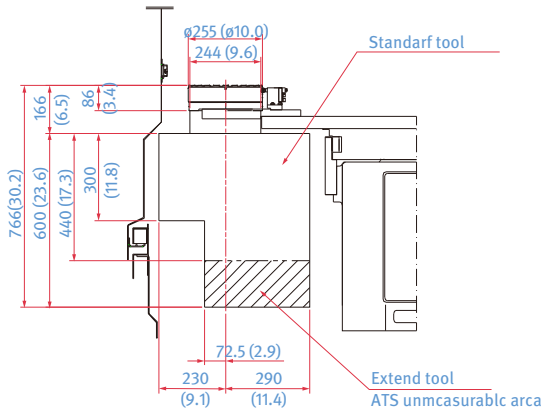

PUMA VTR1216M/FM (15-ATC)

Unit : mm (inch)

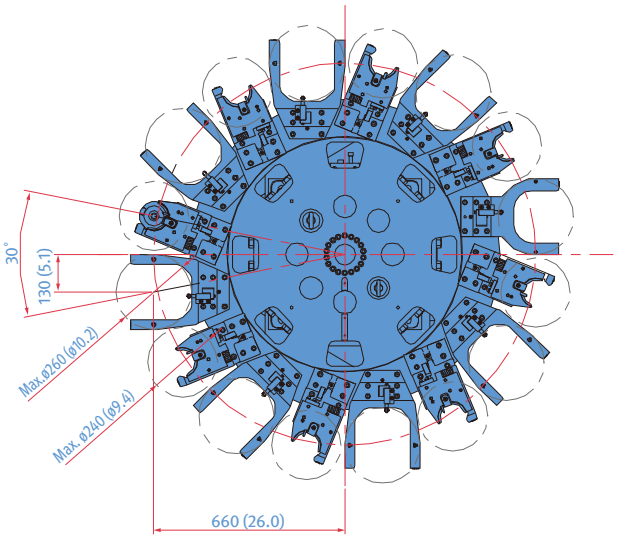

MAX. RAM TOOL SIZE-MILLING

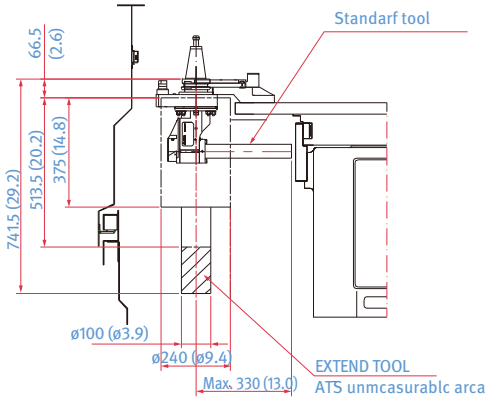

PUMA VTR1012FC/1216FC (60-ATC)

Unit : mm (inch)

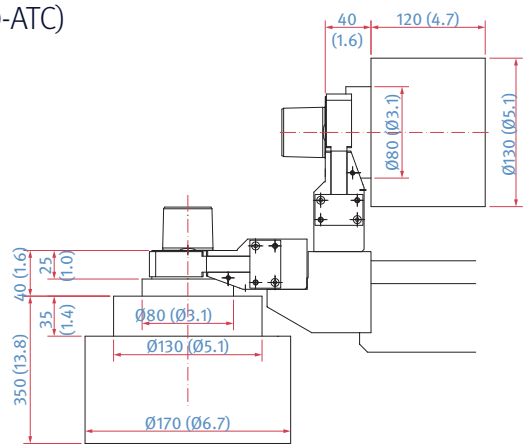

TOOL INTERFERENCE DIAGRAM

PUMA VTR1620/2025 (12-ATC)

Unit : mm (inch)

MAX. RAM TOOL SIZE-TURNING

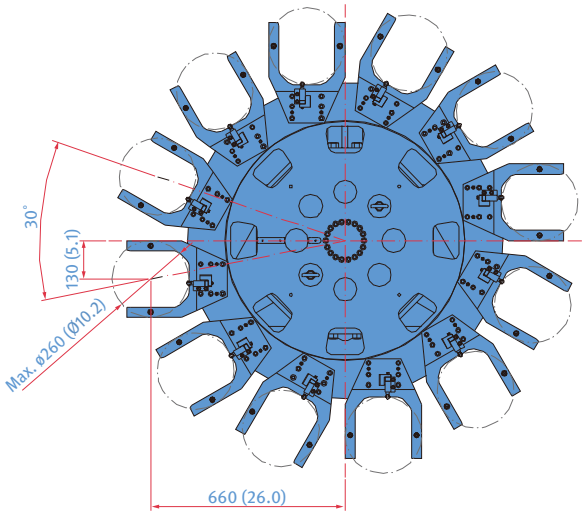

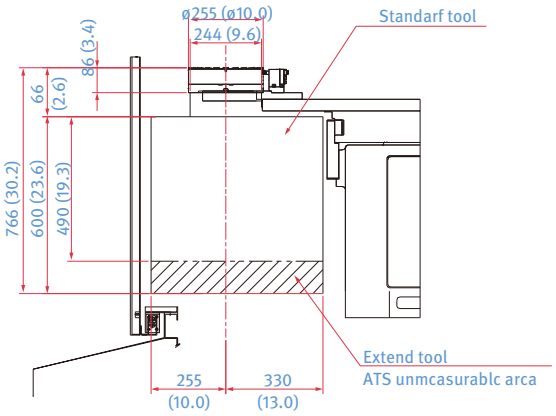

PUMA VTR1620M/2025M (15-ATC)

Unit : mm (inch)

MAX. RAM TOOL SIZE-MILLING

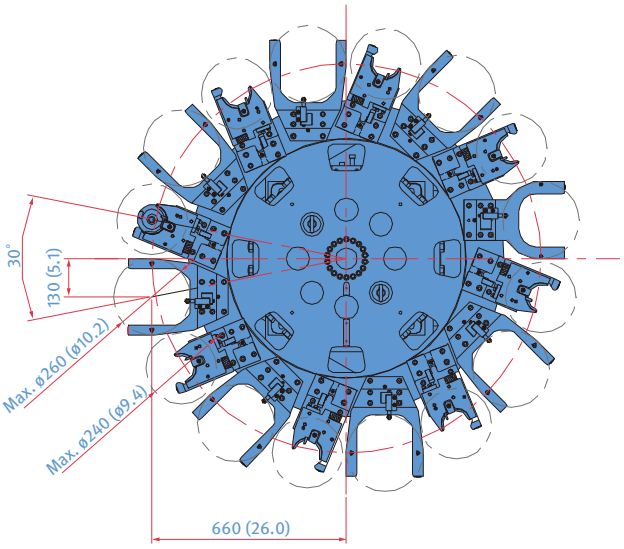

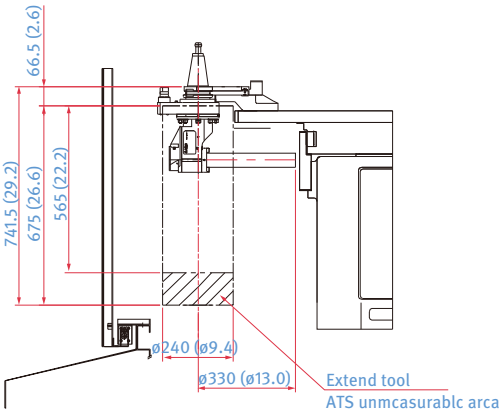

MACHINE SPECIFICATIONS

PUMA VTR1012F/1012FC/1216F/1216FC/1216FM/1216/1216M

Description			Unit	PUMA VTR1012F	PUMA VTR1012FC	PUMA VTR1216F	PUMA VTR1216FC	PUMA VTR1216FM	PUMA VTR1216	PUMA VTR1216M
Capacity	Swing over bed		mm (inch)	1350 (53.1)	1300 (25.0)	1700 (25.0)		1700 (25.0)		
	Recom. turning diameter		mm (inch)	1000 (39.4)		1250 (49.2)		1250 (49.2)		
	Max. turning diameter		mm (inch)	1250 (49.2)		1600 (63.0)		1600 (63.0)		
	Max. turning height		mm (inch)	750 (29.5)	695 (27.4)	950 (37.4)	895 (35.2)	950 (37.4)	1250 (49.2)	
	Max. allowable workpiece weight (including chuck weight)		kg (lb)	6000 (13227.5)		8000 (17636.7)		8000 (17636.7)		
Travels	Travel distance	X-axis	mm (inch)	-575 ~ 850 (-22.6~33.5)		-700 ~ 1000 (-27.6~39.4)		-700 ~ 1000 (-27.6~39.4)		
		Z-axis	mm (inch)	700 (27.6)		900 (35.4)			1200 (47.2)	
		W-axis	mm (inch)	-	-	-	-	-	500 (250 x 2step) (19.7(9.8x2step))	
	Rapid traverse Rate	X-axis	m/min (ipm)	12 (472.4)		12 (472.4)		12 (472.4)		
		Z-axis	m/min (ipm)	10 (393.7)		10 (393.7)		10 (393.7)		
		W-axis	m/min (ipm)	-	-	-	-	-	-	-
Spindle	Max. spindle speed		r/min	600		400		400		
	Motor power	Std.(S3 60%/cont.)	kW (Hp)	45/37 (60.3/49.6)		45/37 (60.3/49.6)		45/37 (60.3/49.6)		
		Opt1(High torque, S3 25%/60%/cont.)		70/45/37 (93.9/60.3/49.6)		70/45/37 (93.9/60.3/49.6)		70/45/37 (93.9/60.3/49.6)		
		Opt2(High torque /Power, S3 25%/60%/cont.)		-	-	-	-	75/60 (100.6/80.5)	-	75/60 (100.6/80.5)
	Max. torque	Std.	N·m (ft-lbs)	12354 (9117.3)		20557 (15171.1)		20557 (15171.1)		
		Opt1(High torque)		19217 (14182.1)		31997 (23613.8)		31997 (23613.8)		
		Opt2(High torque/Power)		-	-	-	-	31147 (22986.5)	-	31147 (22986.5)
	Min. spindle indexing angle(C-axis)		deg	-	-	-	-	0.001	-	0.001
Tool magazine	Tool storage capa. (Max.)		ea	12 {24}	60 (CAPTO C6 or C8)	12 {24}	60 (CAPTO C6 or C8)	15{23,33}	12 {24}	15 {23, 33}
	Magazine indexing time(1st)		s	4		4		4		
	Max. tool length		mm (inch)	460 (18.1)	Horizontal (Turning) : 160 (6.3) Vertical (Turning) : 350 (13.8)	460 (18.1)	Horizontal (Turning) : 160 (6.3) Vertical (Turning) : 350 (13.8)	Turning : 460 (18.1) Milling : 350 (13.8)	500 (19.7)	Turning : 500 (19.7) Milling : 350 (13.8)
Tooling	OD/Face tool size		mm (inch)	32{40} (1.3{1.6})	-	32{40} (1.3{1.6})	-	32{40} (1.3{1.6})		
	ID tool size		mm (inch)	32 (1.3)	-	32 (1.3)	-	32 (1.3)		
	Boring Bar dia.		mm (inch)	ø100 (ø3.9)	-	ø100 (ø3.9)	-	ø100 (ø3.9)		
	Tool clamping force		kN	78.5	-	78.5	-	Turning : 78.5 Milling : 23.5	78.5	Turning : 78.5 Milling : 23.5
RAM	RAM size		mm (inch)	260 x 260 (10.2 X 10.2)		260 x 260 (10.2 X 10.2)		260 x 260 (10.2 X 10.2)		
Milling spindle	Max. spindle speed		r/min	-	-	-	-	3000	-	3000
	Motor power	Std.(S325%/60%/cont.)	kW (Hp)	-	-	-	-	18.5/15/11 (24.8/20.1/14.8)	-	18.5/15/11 (24.8/20.1/14.8)
		Opt(High torque/Power, S3 25%/60%/cont.)		-	-	-	-	25/18.5/15 (33.5/24.8/20.1)	-	25/18.5/15 (33.5/24.8/20.1)
	Max. spindle torque	Std.	N·m (ft-lbs)	-	-	-	-	674 (497.4)	-	674 (497.4)
		Opt(High torque/Power)		-	-	-	-	1273 (939.5)	-	1273 (939.5)
Power source	Power consumption		kVA	112.2		112.2		112.2		
Machine dimensions	Length		mm (inch)	4970 (195.7)	5545 (218.3)	5590 (220.1)	5965 (234.8)	5590 (220.1)		
	Width		mm (inch)	3147 (123.9)	3987 (157.0)	4066 (160.1)	4115 (162.0)	4066 (160.1)		
	Height		mm (inch)	4768 (187.7)		5065 (199.4)		5065 (199.4)	5610 (220.9)	
	Weight		kg (lb)	26000 (57319.3)		27500 (60626.2)		28000 (61728.5)	29500 (65035.4)	30000 (66137.7)
Control	CNC system			DOOSAN-FANUC i PLUS						

*{ } : Option

MACHINE SPECIFICATIONS

PUMA VTR1620/1620M/2025/2025M

Description			Unit	PUMA VTR1620	PUMA VTR1620M	PUMA VTR2025	PUMA VTR2025M
Capacity	Swing over bed		mm (inch)	2100 (82.7)		2500 (98.4)	
	Recom. turning diameter		mm (inch)	1600 (63.0)		2000 (78.7)	
	Max. turning diameter		mm (inch)	2000 (78.7)		2500 (98.4)	
	Max. turning height		mm (inch)	1800 (70.9)		2000 (78.7)	
	Max. allowable workpiece weight (including chuck weight)		kg (lb)	10000 (22045.9)		15000 (33068.9)	
Travels	Travel distance	X-axis	mm (inch)	-800 ~ 1420 (-31.5~55.9)		-1000~1640 (-39.4~64.6)	
		Z-axis	mm (inch)	1200 (47.2)		1400 (55.1)	
		W-axis	mm (inch)	840(280 x 3step) (33.1(11.0x3step))		1020(340x3step) ((40.2)119.7x3step)	
	Rapid traverse Rate	X-axis	m/min (ipm)	12 (472.4)		10 (393.7)	
		Z-axis	m/min (ipm)	10 (393.7)		10 (393.7)	
		W-axis	m/min (ipm)	-	-	-	-
Spindle	Max. spindle speed		r/min	300		200	
	Motor power	Std.(S3 60%/cont.)	kW (Hp)	45/37 (60.3/49.6)		75/60(100.6/80.5)	
		Opt1(High torque, S3 25%/60%/cont.)		70/45/37 (93.9/60.3/49.6)		-	-
		Opt2(High torque/Power, S3 25%/60%/cont.)		-	75/60 (100.6/80.5)	-	-
	Max. torque	Std.	N·m (ft-lbs)	24668 (18205.0)		46720 (34479.4)	
		Opt1(High torque)		38373 (28319.3)		-	-
		Opt2(Hightorque/Power)		-	37376 (27583.5)	-	-
	Min. spindle indexing angle(C-axis)		deg	-	0.001	-	0.001
Tool magazine	Tool storage capa. (Max.)		ea	12 {24}	15 {23, 33}	12 {24}	15{23/33}
	Magazine indexing time(1st)		s	4		4	
	Max. tool length		mm (inch)	500 (19.7)	Turning : 500 (19.7) Milling : 350 (13.8)	500	Turning : 500 (19.7) Milling : 350 (13.8)
Tooling	OD/Face tool size		mm (inch)	32{40} (1.3{1.6})		32{40} (1.3{1.6})	
	ID tool size		mm (inch)	32 (1.3)		32 (1.3)	
	Boring bar dia.		mm (inch)	ø100 (ø3.9)		ø100 (ø3.9)	
	Tool clamping force		kN	78.5	Turning : 78.5 Milling : 23.5	78.5	Turning : 78.5 Milling : 23.5
RAM	RAM size		mm (inch)	260 x 260 (10.2 X 10.2)		260 x 260 (10.2 X 10.2)	
Milling spindle	Max. spindle speed		r/min	-	3000	-	3000
	Motor power	Std.(S325%/60%/cont.)	kW (Hp)	-	18.5/15/11 (24.8/20.1/14.8)	-	35/26/22 (46.9/34.9/29.5)
		Opt(High torque/Power, S3 25%/60%/cont.)		-	35/26/22 (46.9/34.9/29.5)	-	-
	Max. spindle torque	Std.	N·m (ft-lbs)	-	674 (497.4)	-	1782 (1315.1)
		Opt(High torque/Power)		-	1782 (1315.1)	-	-
Power source	Power consumption		kVA	112.2		120	
Machine dimensions	Length		mm (inch)	6500 (255.9)		7296 (287.2)	
	Width		mm (inch)	4757 (187.3)		4836 (190.4)	
	Height		mm (inch)	6345 (249.8)		7600 (299.2)	7744 (304.9)
	Weight		kg (lb)	39000 (85979.0)	40000 (88183.6)	55000 (121252.5)	56000 (123457.0)
Control	CNC system			DOOSAN-FANUC i PLUS			

*{ } : Option

WHY DOOSAN?

The Doosan promise, MACHINE GREATNESS, has two important meanings. The first is simple: Doosan makes great machines. The second is a challenge to our end-users. With a product line that is this comprehensive, accurate and reliable, we equip our customers to machine greatness.

The big question: ***Why should you choose Doosan over other options?*** Here's why...

WHAT YOU MAKE AND HOW YOU MAKE IT MATTERS—SO MAKE IT GREAT WITH DOOSAN.

UNBEATABLE MACHINES

You won't find a more comprehensive range or a better combination of value, performance and reliability anywhere else.

READILY AVAILABLE - ANYWHERE IN THE WORLD

Machining centers (including 5-axis machines), lathes, multi-tasking turning centers and mill-turn machines, and horizontal borers with best-in-class specifications are all available...ready to install.

ROBUST PRODUCT LINE

We offer an impressive range of machine models and hundreds of configurations. Whatever your machining needs and requirements, there's a Doosan for you.

EXPERT SERVICE

Our dedicated, experienced and knowledgeable team is totally committed to improving your productivity, growth and success.

CUSTOMER SUPPORT AND SERVICES

We're there for you whenever you need us.

We help our customers operate at maximum efficiency by providing them with a range of tried, tested and trusted services - from pre-sales consultancy to post-sales support.

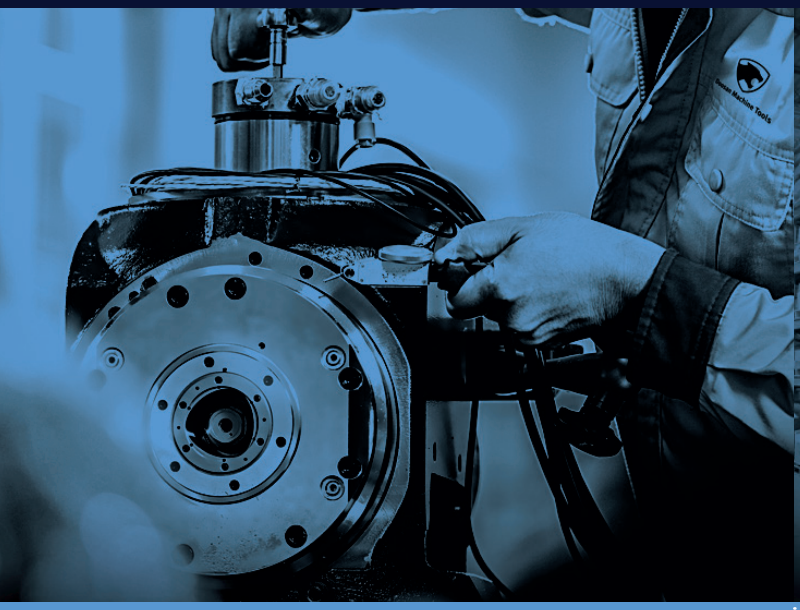

FIELD SERVICES

- On-site service
- Machine installation and testing
- Scheduled preventive maintenance
- Machine repair service

PARTS SUPPLY

- Supplying a wide range of original Doosan spare parts
- Parts repair service

TRAINING

- Programming, machine setup and operation
- Electrical and mechanical maintenance
- Applications engineering

TECHNICAL SUPPORT

- Supports machining methods and technology
- Responds to technical queries
- Provides technical consultancy

RESPONDING TO CUSTOMERS
ANYTIME, ANYWHERE

Doosan Machine Tools' Global Network

Doosan Machine Tools provides systems-based professional support services, before and after the machine tool sale, by responding quickly and efficiently to customers. By supplying spare parts, product training, field service and technical support, we provide the expert care, attention and assistance our customers expect from a market leader.

Global sales and service support network

4	**Corporations**
167	**Dealer networks**
51	**Technical centers** Technical center, Sales support, Service support, Parts support
200	**Service posts**
3	**Factories**

Doosan Machine Tools

doosanmachinetools.com

Head Office
22F T Tower, 30, Sowol-ro 2-gil
Jung-gu, Seoul, Korea, 04637
Tel +82-2-6972-0370/0350
Fax +82-2-6972-0400

Doosan Machine Tools America
19A Chapin Road, Pine Brook
New Jersey 07058, United States
Tel: +1-973-618-2500
Fax: +1-973-618-2501

Doosan Machine Tools Europe
Emdener Strasse 24, D-41540
Dormagen, Germany
Tel: +49-2133-5067-100
Fax: +49-2133-5067-111

Doosan Machine Tools India
No.82, Jakkuar Village
Yelahanka Hobil, Bangalore-560064
Tel: + 91-80-2205-6900
E-mail: india@doosanmt.com

Doosan Machine Tools China
Room 101,201,301, Building 39 Xinzhuan
Highway No.258 Songjiang District
China Shanghai (201612)
Tel: +86 21-5445-1155
Fax: +86 21-6405-1472

Sales inquiry
sales@doosanmt.com

*For more details, please contact Doosan Machine Tools.

*Specifications and information contained within this catalogue may be changed without prior notice.

*Doosan Machine Tools Co., Ltd. is a subsidiary of MBK Partners. The trademark DOOSAN is used under a licensing agreement with Doosan Corporation, the registered trademark holder.

ver. EN 211217 SU